BRAC UNIVERSITY
Department of Electrical and Electronic Engineering

THESIS PAPER

WEB BASED HOME AUTOMATION

ARAFAT JAHANGIR RABBI 12121097
TAMANNA JAHAN 12121172
S.M SHAMSRAJ ISLAM 11321023
ABU RAIHAN PERVEZ 11321028

DATE- 26 APRIL, 2015

Table of Contents

List of Figures

Declaration

This is to declare that the thesis entitled "WEB BASED HOME AUTOMATION" submitted by our group members in partial fulfillment of the requirements for the award of Bachelor of Science in Electrical and Electronics Engineering during spring semester in 2015 at BRAC University under the guidance of DR. MOHAMMED BELAL HOSSAIN BHUIAN. To the best of our knowledge, the works in this thesis has not been submitted to any other university for the award of any degree.

Date: 26 April, 2015

Supervisor

DR. MOHAMMED BELAL HOSSAIN BHUIAN

ARAFAT JAHANGIR RABBI

ID: 12121097

TAMANNA JAHAN

ID: 12121172

S.M. SHAMSRAJ ISLAM

ID: 11321023

ABU RAIHAN PERVEZ

ID: 11321028

Acknowledgement

We would like to express our gratitude to our supervisor DR. MOHAMMED BELAL HOSSAIN BHUIAN for his cordial support, motivation and patience. Besides, his guidance has helped throughout the thesis work to make it fulfilling.

Moreover, we are grateful to our friend Zakir Hasan for his help in many cases. He shared his knowledge to accomplish our thesis.

Throughout the project we were very supportive to each other. Our combined efforts are reflected in this thesis paper.

Abstract

This project is developed by using a real time database that can be accessed and modified through internet. For hardware components Ethernet shield, ATmega32A microcontroller and little circuitry is incorporated. In attempt to control appliances, motion from surrounding environment and command from real time server is required. The main focus of our work is to control appliances in a time range through internet and sensing motion of a particular area. Based upon this the whole system is developed. Now-a-days people have desire to make a system which can be managed and upgraded from distant place. For accomplishing that web based Home automation is established. Signal from web database and motion of a certain area provide signals to ATmega32A microcontroller. Further, processing and using logics the incoming signals are sent to control the connected appliances through relay. The database is developed using PHP, HTML, CSS and some other scripting languages. On the other hand, microcontroller codes are developed in its AVR studio. In the whole system database along with Atmega32A microcontroller and motion sensor control the connected appliances with the circuit.

Chapter-1

Introduction

1.1 Introduction

At present the effort of human being in terms of labor is declining to accomplish any task because of automation technology. It is shaping to simplify our day to day life. Automation has emerged as a driving role to control the system. It decreases the need of our participations. It is one of the most predominant advanced of technology.

Home automation ensures less labor to accomplish any work for which a human needs to apply huge effort. For this, automation is introduced in industrial purpose to reduce labor quantities and incorporating efficiency during work. Besides, the system is reducing muscular and mental requirements of work. For availing such kind of facility from automation this technology is brought for household purposes. Home automation in this century plays a vital role in home along with office. For implementing the technology less requirements needed in terms of services the system provides. Generally, the system requires less circuitry and for controlling the system needs internet or some other available means.

In our work we have tried to stand home automation accessing from web and detection of motion which control this overall automation system. For this web access, a class routine is developed. And that system is established considering the routine of a faculty member to make control appliances. Basically, our developed system gets command from web and besides detects motions through a motion sensor and send sends signals to circuit. Processing the duo signals microcontroller controls appliances. If both incoming signals are high then appliance is ON. On the other hand, codes are developed in such a way if any of the signals is in low state, and then device is OFF.

1.2 Background

Home automation makes life simple for human beings. Various efforts are made in this arena. Our effort is to transform life into a simple way using modern technology. For fulfilling that desire web based home automation is selected. Now a day's internet use has become a very common phenomenon. People grab various devices to access internet. In that, internet access is available in everywhere. To facilitate with this access we have come forward to establish a system.

In our system database is developed to access and update class routine. Ethernet shield is used as a network provider. An inverter logic gate is used to send totally digital signal to the microcontroller. For microcontroller ATmega32A is used. PIR motion sensor detects motion in a certain range. BJT is used to drive relay. Relay is included for controlling AC power sources.

.

1.3 Home automation

Implementing the concept of home automation in home or office to make either smart home or smart office has started since 1980.In the early years; the technology was used only to provide comfort to disabled persons. During this period, this technology has become very well known. It has gained much popularity for its ample applications in daily life. Life is becoming easier compared to few years back blessing of automation in home or office. People wish not only to avail the benefits of home automation. Besides, controlling the devices has become within their want. This system integrates all electrical appliances in a home or office with each other.

Home automation is providing home safety for dwellers.it automatically turn lights on in closets, stairways, and other dark places.Thus accidentally tripping or running into thing is decreased.everywhere environmental issues are raised before introducing any technoogy.In this regard home utomation provides a better solution.Devices included in home automation consumes less powr.Besides,it saves energy.Thus home automation technology is so far environmentally suitable.Moreover,the technology keeps mind in peace.In most cases,guardians face problems and always they keep tensioning for the safety of their children staying in home[1].

In home automation system internet access is used to control from far away. For years, internet is used only for surfing pages, searching information and downloading software and other things. Advancement of technology is forcing to make interaction internet with machineries and devices. In home automation system comfort and security of houses have been enhanced. Besides, people are concerning over costs. In offices, a division of people are employed only to make supervision of some manual means typed work. Home automation is replacing those arrangements. For this, cost is highly reduced. Besides, for manual labor engaged to control appliances waste energy in cases. It is seen that appliances continue to run though people are not present in their respective places. For this energy cannot stop consuming. If this happens for a long time then there have possibility to misuse energy in a huge amount. To overcome this obstacle home automation is encouraged to apply. Home automation does that challenging work. That’s why; home automation is presented as energy efficient.

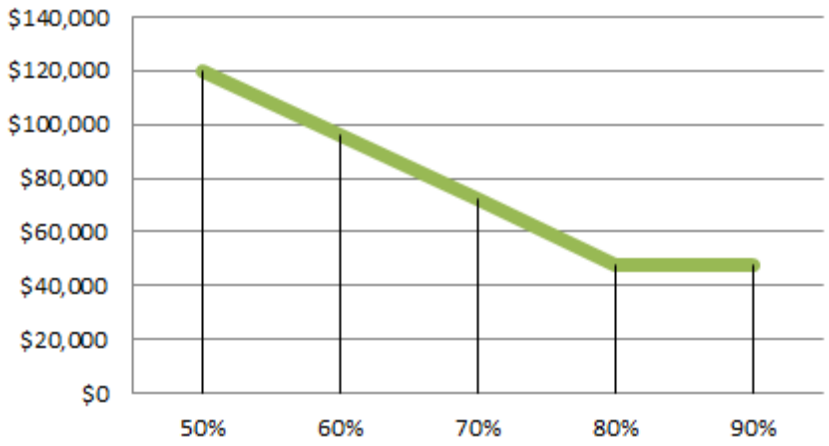

Figure-1.1: Cost saved by home automation [2]

In recent year's home automation is gaining much popularity. The trend is also in favor of using home automation technology. If we look around residences, malls, offices, use of home automation systems will draw attention.

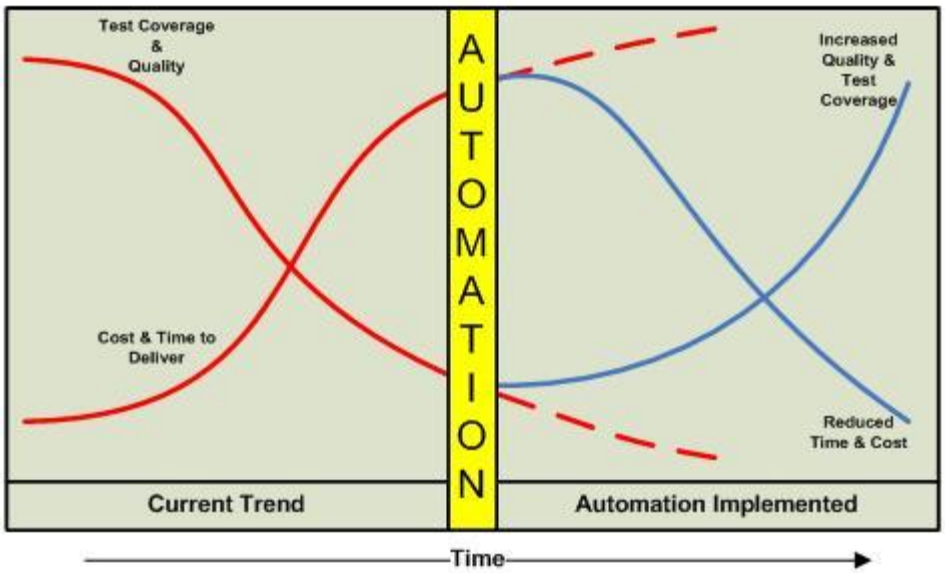

Figure- 1.2: Recent trend of home automation [3]

1.3.1 Systems of Home Automation [4]

There are 3 main network types of home automation systems that can be installed. These systems are categorized as power line systems, wired systems and wireless systems.

Power Line Systems:

This is called the most affordable system. Power line systems rely on the existing power lines to transfer things such as security camera feeds and lighting information to a common control interface. Usually, these are X10 technology based systems.

Wired Systems:

Wired systems use cables to communicate information. It is easier to install. Hardwiring all of the systems together through cables to a common junction point, the system is developed.

Wireless Systems:

For this system no need to use traditional cables. Wireless systems integrate with Wi-Fi networks, meaning that they are easily compatible with any existing home networks, such as the ones formed by computers. However, some wireless systems use a different radio frequency for making them incompatible with open networks.

1.3.2 Worldwide Home Automation

Home automation technology is becoming more popular and globally it is highly used. For this, a large home automation market already is set up. According to the analysts, the market is expanding because of its extreme demand. Revenues earned from shipments of home automation systems in Europe and North America will enhance at a compound annual growth rate of 43 percent from US$ 2.2 billion in 2012 to closely US$ 12.8 billion in 2017[3]. The amount realizes us that automation provides ample amount of efficiency in different sector worldwide. American Smart Home market also is going to generate huge amount of revenues in coming 2020.From the statistical information, we are able to know that in 2013 the smart home market revenue was

about 7.19 billion U.S.$ but blessing of automation it will reach about 22.4 billion U.S.$ in 2020. [4].

Home Automation applications are mainly in lighting, safety and security, HVAC (Heating, Ventilation, and Air-Conditioning),entertainment (home, audio) and others(robotics, health care).In current years, automation systems were nourished in residences, shopping malls, sky scrapers ,hotels in colorful ways. Many organizations such as 2GIG Technologies, Siemens AG, Johnson Controls, Honeywell International Inc., iControl Networks Inc., Vantage Controls are leading the market of home automation [7].

1.3.3 Bangladesh Perspective

In our country still now home automation cannot reach door to door. Though it makes our life easier and save our time, the technology has some implementations in different sector which is low compared with developed countries. In our country Dutch Bangla Bank used automation system at first in banking sector. In 2003, this system was applied for its purpose and it helped to reduce the cost of consumers (8). Another important area from where merits of home automation are enjoyed is Chittagong custom House Automation project. It is marked as most popular revenue earning area for Bangladesh Government. From Chittagong custom House our government earns about BDT 15000+ crore as profit each year which is also blessing of automation. Applying automation for this project the 42 steps long process has been reduced to only 6 steps in data soft as well as the bill of entry cost has been waned BDT 180 to BDT 50. For example, Importer and Exporter off Dock, EPZ, Shipping Agents, Custom intelligence, Custom Bond, Friegtht, and Farwards are belonging to the system of Chittagong Custom House Automation project (9).

1.3.4 Web Based Home Automation

Such a system must be developed which can be availed by everyone. Besides, hardware and software requirements for this must be simple. So that people in all stages and ages can extract its advantages. Several home automation technology systems are available. Among this web based automation is different. For this, an internet connection is required. In this regard, simple

circuit arrangements are needed. The system can be accessed from everywhere. For implementing our system a class routine of a faculty member of our university is considered. Then, the class routine is developed in web languages like PHP, HTML CSS and MY SQL. His office room is taken in our consideration. Class schedules vary from time to time. For this, manually control the devices in his room is needed. In our system this labor is vanished. A smart database based on his routine is established. Time range through which whether a device would be on or off can be determined along with detecting surrounding motion. If hardware arrangement can detect motion of a particular range within this time range, then devices would be on. On contrary, if motion within this time arrangement is not detected, then devices would be off.

1.4 Aim and Scope of the Thesis

Many works and efforts already have done in the field of home automation. Advancement of technology forces to create new technologies and implanting that in this arena. Home automation includes implanting it for security purposes, automatic controlling devices. Our effort was totally to build a system that needs least cost to implement. Besides, our focus was on those devices that can easily be availed. In this project, we used the devices are available and low cost devices. Moreover, the system can easily be interfaced. For this the project seems to be in a friendly manner. That's why we selected web based system. It can be controlled through anywhere with proper network access. And it is not quite difficult to manage the whole arrangements.

This web based home automation system can be implemented in any institutions like schools, colleges and universities. The project can be used in offices as well. The database is developed in a way that can synchronize with real time and date. Apart from, the system is particularly suitable for teachers who have rushed all time for classes. And for the respected job a planned routine is made. That's why; it is quite obvious for them to forget about keeping lights, fans and basic appliances off. In this regard, the system supports them to be relieved from such anxieties. This way the whole institution can be brought under automation.

1.5 Related Works

Hasan & Hossain [26] projected home automation using AVR microcontroller. In this paper it is said and explained how presence in a room can control appliances. Sensing temperature and further processing through microcontroller devices would be either on or off. The paper focuses how the overall system simplifies and provides comfort to human beings. This concept was totally carried out in our work.

Tasdelen & Bingol [29] proposed a home automation system that is web based. Throughout the work it is tried to figure out establishing a smart home using PLC (Programmable Logic Controller).in that paper focus was on ventilation, lighting and security. Besides, any change in the system is possible with monitoring the feedbacks. The efforts are incorporated in our project.

Chapter-2

Real Time Server Design

2.1 Introduction of Database

A database is an organized collection of data. The data is typically organized to model aspects of reality in a way that support process requiring information. Basically database management systems are computer software applications that interact with user, other applications, and the database itself to capture and analyze data. A general aspect database system structured is to permit the explanation, creation, querying, update and administration of database. A well-organized database management system is includes like, MySQL, PostgreSQL, Oracle, IBM DB2. Databases are used to support internal operations of organization and hold administrative information and more specialized data like any sort of data.

2.1.1 HTML (Hypertext Markup Language)

HTML (Hypertext Markup Language) is not programming language it's a markup language.HTML used to develop a web page. In HTML language there is been some parameter called (Element), (Tag), (Attribute). Here Elements is main focused parameter of HTML. The element of HTML has some specific layer. Whatever we see in web page that could be the paragraph text, besides all the lamination and decoration are consists of the page elements. 1. - opening paragraph tag. 2. Element Content- paragraph words 3. - closing tag. [10] In every web page there is been some basic four element are HTML, head, and title and body elements.

<html> Element...</html>. At first when start to write the HTML then we had to put the (<>) sign like <html>. Moreover if want to show the project name over the web then we need to write it like <html> Project </html>. We can easily create a web page in the note pad.

<head> element is one of the document head that gives a thought of document. <head> element consider the header of the page. The tag, which are store in head element do not show in the browser. We do the things through title. *<title> element*. We need to keep the <title > element in between of head element. Whatever names are being shoed as title on the web page we write it the opening <title>& close title. *<body> element***.** Body element shows the all parameter. The showing elements of the web page are built in body element. There is been a showing of tag is up to

bottom and left to right. There are main three parameters of tag i) opening tag ii) contents iii) closing tag. [10].Body tag holds all element of web page. We need to put the tables, list, forms and paragraphing body element.

2.1.2 CSS (Cascading Style Sheets)

CSS is another web design language. If want to make our created page more beautiful we will do it through CSS. By changing the code we can restyle our webpage again. 'Selector' is been the heart of CSS. It refers how you connect CSS with HTML.

SELECTOR {PROPERTY: VALUE}

"Property" is one of the CSS elements which you can control through your won desire. "VALUE" is the reading of a certain property. Selector name, we can create a direct connection with the html tag through the selector name as we control it accordingly. P {PROPERTY: VALUE} p is the selector name which contain the paragraph tag. There are three written types of CSS (**C**ascading **S**tyle **S**heets): i) internal ii) external & iii) inline. When we use CSS in the internet then we need to add new tag like <style> tag. We need to keep it in HTML <head>.

```
01.<html>
02.<head>
03.<style>
04. </style>
05.</head>
06.<body>
07.<p>Your page's content!</p>
08.</body>
09.</html>
```

[10]. There won't be current show up the page. This style tag will told the browser of adding some new CSS element. There are some basic difference between CSS code and HTML code. We don't write CSS code as we did for HTML code. There will be a good concern of keeping out the CSS from HTML. External CSS file is just hold the CSS code and we save it by "css" file

extension. We link the CSS tag through <link > rather use <style > tag. We used external CSS for keeping the web design and separate the content. If we keep to the name of another file then we can use the CSS code again. Inline CSS is the procedure that we use CSS style in the HTML code. Inline CSS got the higher priority compare to internal CSS and external CSS. Despite of the fact of being a certain style but you can override the style.

2.1.3 PHP

PHP Hypertext Preprocessor server site cross platform, HTML-embedded screening language. The main purpose of this language is developing a web page dynamically faster. The overall syntax of PHP comes from C. Perl, Java. To learn the PHP we need to know some language like, HTML, C and JavaScript. To write the PHP code we need to maintain some parameter. All PHP codes start with <? PHP and end with?>. A PHP scripting Block stays in the document. In PHP code we finish several instructions with semicolon. In PHP we use "$" as variable. Variable is like a container where we can put so many information. For example one text like *string "hello project" or* integer value 100. [10]. If put the data at ones of any variable we could use it so many time instead of using the main data. As I mentioned before, in PHP we used "$" as variable. In PHP "string" is very important. We need to create the string before we use it. A string can use directly in a function or it can store in a variable. We create the string by using Double quotes and Single quotes. Now there is another important thing is called PHP Form. From users are basically used for getting the data. There are two variables in PHP those are able to get the data from Form users. $_GET & $_POST is one of the HTML from which has two input field and one submit button. The data of from are used in PHP in two ways like POST & GET. The data which are including in GET method got a visual in the browser as everyone can see. Apparently you can send approximate 250 characters. In this case of POST method, whatever you are sending there won't be any visual in the browser. The main advantage of this method is you can send as much as data you want (up to 8mb) [10].We can use GET method for lower amount of data. Similarly, for large amount of data and password we can use POST Method.

2.1.4 MySQL (Standard Query Language)

SQL is a language that we can manipulate and access any data in database system like MySQL, SQL, Server, Oracle etc. It's a 4th generation language. MySQL is not a programming language due to have limitation of supporting data structure like loop, branch. We can do so many things by this language [10].

i) can create a new database
ii) a new table
iii) do query
iv) take out the data from database
v) can include a new record
vi) can update a data
vii) delete data

There are two types of SQL i) DDL ii) DML. DDL (Data Definition Language) is the language that we can create a database, delete data, define index, making a path between two tables, select constraints for table etc. there are some DDL statement like i) CREATE DATABASE- create a new database ii) ALTER DATABASE- maintain the database iii) CREATE TABLE- create a new table iv) ALTER TABLE- maintain the table v) CREATE INDEX- create index vi) DROP INDEX-destroy index.

DML (Data Manipulation Language), we do the Query and update in SQL by DML. i) format SELECT- take data from database ii) UPDATE- update the data iii) DELETE- delete data from database iv) INSERT INTO –include data in database.

2.2 Database Software

To create a website database is highly needed. Database seems to like a stationary shop we organized goods in different self so we can find it easily. If we want to build a web page we need

to put much information to show the webpage. To build this webpage we need some software called RDBMS (Relational Database Management Software).

2.2.1 XAMPP& WAMP

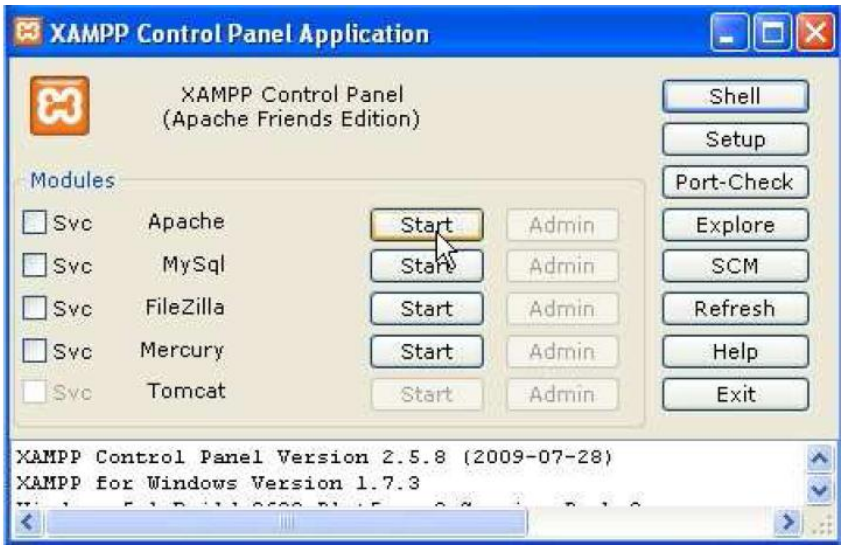

Figure-2.1: XAMPP software setup. [10]

We usually write the PHP code in the note pad or text pad. To run the PHP program we need to use software. PHP program can be run under various like, WAMP, XAMPP etc.

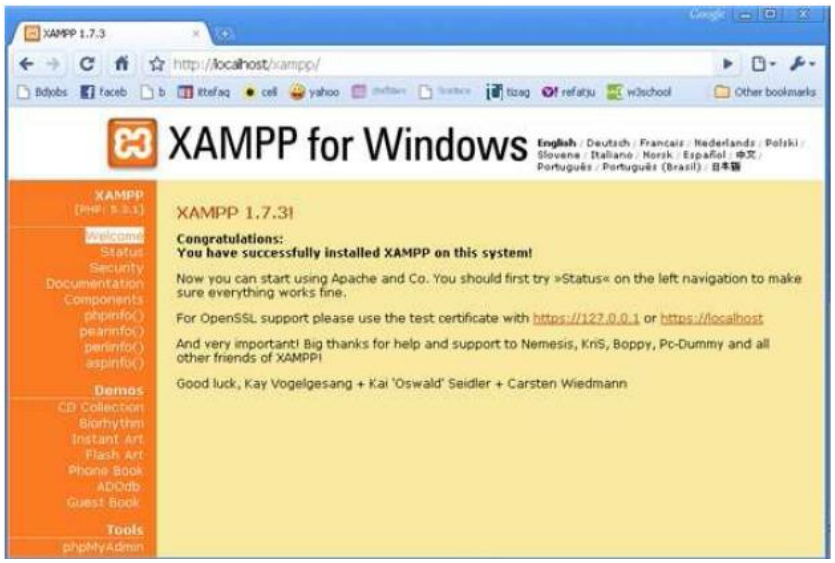

Figure-2.2: XAMPP for windows [10]

2.3 URLwww.sportsliveblog.com/brac/class_routine.php

2.4 ONLINE CLASS ROUTINE

This '**Online Class Routine**' project developed through HTML5 (Hyper Text Markup Language5), CSS3 (Cascading Style Sheet 3), PHP (php hypertext preprocessor) version 5.5.12 and MySQL (Structured Query Language).We created separately seven database in our SQL server those are '0001', '0002', '0003', '0004', '0005', '0006', '0007' each database containing separately seven table. We created the table name as '001', '002', '003', '004', '005', '006', '007'. In figure shows the basic schema of online class routine and existing URL is

2.5 System Page of Online Class Routine

www.sportsliveblog.com/brac/class_routine.php

CLASS ROUTINE

SL NO	DAY	First Class					Second Class					Third Class					UPDATE	
		Class Code	Start Time		End Time		Class Code	Start Time		End Time		Class Code	Start Time		End Time			
			HH	MM	HH	MM		HH	MM	HH	MM		HH	MM	HH	MM		
1	Saturday	EEE-06	1	1	1	1	EEE-03	1	1	1	1	EEE-01	1	1	1	1	1234567891	Update
1	Sunday	EEE-02	24	0	24	59	EEE-05	0	0	0	0	EEE-03	0	0	0	0	1234567892	Update
1	Monday	EEE-09	15	5	15	7	EEE-05	12	12	12	14	EEE-06	0	0	0	0	1234567893	Update
1	Tuesday	EEE-05	2	1	1	1	CSE-02	1	1	1	1	ETE-05	1	1	1	1	1234567894	Update
1	Wednesday	EEE-06	20	17	20	19	EEE-07	20	21	20	23	EEE-02	20	24	20	26	1234567895	Update
1	Thursday	EEE-02	1	1	1	1	EEE-04	1	1	1	1	EEE-03	1	1	1	1	1234567896	Update
1	Friday	EEE-02	1	1	1	1	EEE-07	1	1	1	1	EEE-01	1	1	1	1	1234567897	Update

Figure-2.3: Online class routine page

2.6 System Description

After putting this URL we will initially get this page called CLASS ROUTINE (Fig-2.3).This has been depicted in figure.

2.6.1Classified Class

Here we can see that our class routine is categorized three curriculums which contain those First Class, Second Class and Third Class.

CLASS ROUTINE

SL NO	DAY	First Class					Second Class					Third Class					UPDATE
		Class Code	Start Time		End Time		Class Code	Start Time		End Time		Class Code	Start Time		End Time		
			HH	MM	HH	MM		HH	MM	HH	MM		HH	MM	HH	MM	

Figure 2.4: Curriculums of class

The class routine is made for seven days like Saturday, Sunday, Monday, Tuesday, Wednesday, Thursday and Friday.

SL NO	DAY
1	Saturday
1	Sunday
1	Monday
1	Tuesday
1	Wednesday
1	Thursday
1	Friday

Figure-2.5: Seven several days

It uses 11 rows and 20 columns. The number 1234567891,1234567892,1234567893,1234567894,1234567895,1234567896,1234567897 is nothing just containing each day.

2.6.2 Procedure with respect to day & time

In this case of First class, we can see that there are seven class codes with respect to time. There are two time slot beside the class code one is “Start Time” and other one is “End Time”. “Start Time” and “End Time” slot contain hour and minute for each class code and day. Those class

code and time are exactly similar for every day. Simultaneously, there are some other boxes in the right side of the class routine called update. Whatever data, time or class codes need to change we can change it through update.

DAY	First Class				
	Class Code	Start Time		End Time	
		HH	MM	HH	MM
Saturday	EEE-205	22	18	22	19
Sunday	EEE-205	15	0	15	2
Monday	EEE-307	15	5	15	7
Tuesday	EEE-207	2	1	1	1
Wednesday	EEE-243	20	17	20	19
Thursday	EEE-09	17	36	18	36
Friday	EEE-205	17	29	17	30

Figure-2.6: Day& class code with time

2.6.3 Update Page Description

To update the data we need to click the update button. For updating the data we will get another web page (Fig-2.7). These web pages contain all the parameter that we had the first page (Fig-2.3). If we want to update several days like Saturday then we need to click the update button of Saturday.

ID	1
Day	Saturday
1st class course code	EEE-06
1st class start time (HH)	1
1st class start time (MM)	1
1st class end time (HH)	1
1st class end time (MM)	1
2nd class course code	EEE-03
2nd class start time (HH)	1
2nd class start time (MM)	1
2nd class end time (HH)	1
2nd class end time (MM)	1
3rd class course code	EEE-01
3rd class start time (HH)	1
3rd class start time (MM)	1
3rd class end time (HH)	1
3rd class end time (MM)	1
Code	1234567891
Update	

Figure – 2.7: Update page

During this process we will get a whole page of Sunday (Fig-2.7). This page contain the 1st class course code with "1st class start time (HH), 1st class start time (MM)" and "1st class end time (HH), 1st class end time (MM)". Similarly, 2ndclass course code with "2ndclass start time (HH), 2ndclass start time (MM)" and "2ndclass end time (HH), 2ndclass end time (MM)"and finally 3rd class course code with "3rd class start time (HH), 3rd class start time (MM)" and "3rd class end

time (HH), and 3rd class end time (MM)”.Whatever data we want to change or update we put it here. If we want to changethe course code or time we need put those time and course code in this

page (Fig-2.7) and click the update button. After click the update button we will see a confrim massage call “ Your data are updated successfully”. Now if we go back to the previous page (Fig-2.3) then you will see the certain updated page. This updated data will remain same until you change it again and your system will work through it.

2.7 Block Diagram of Real Time Server Design

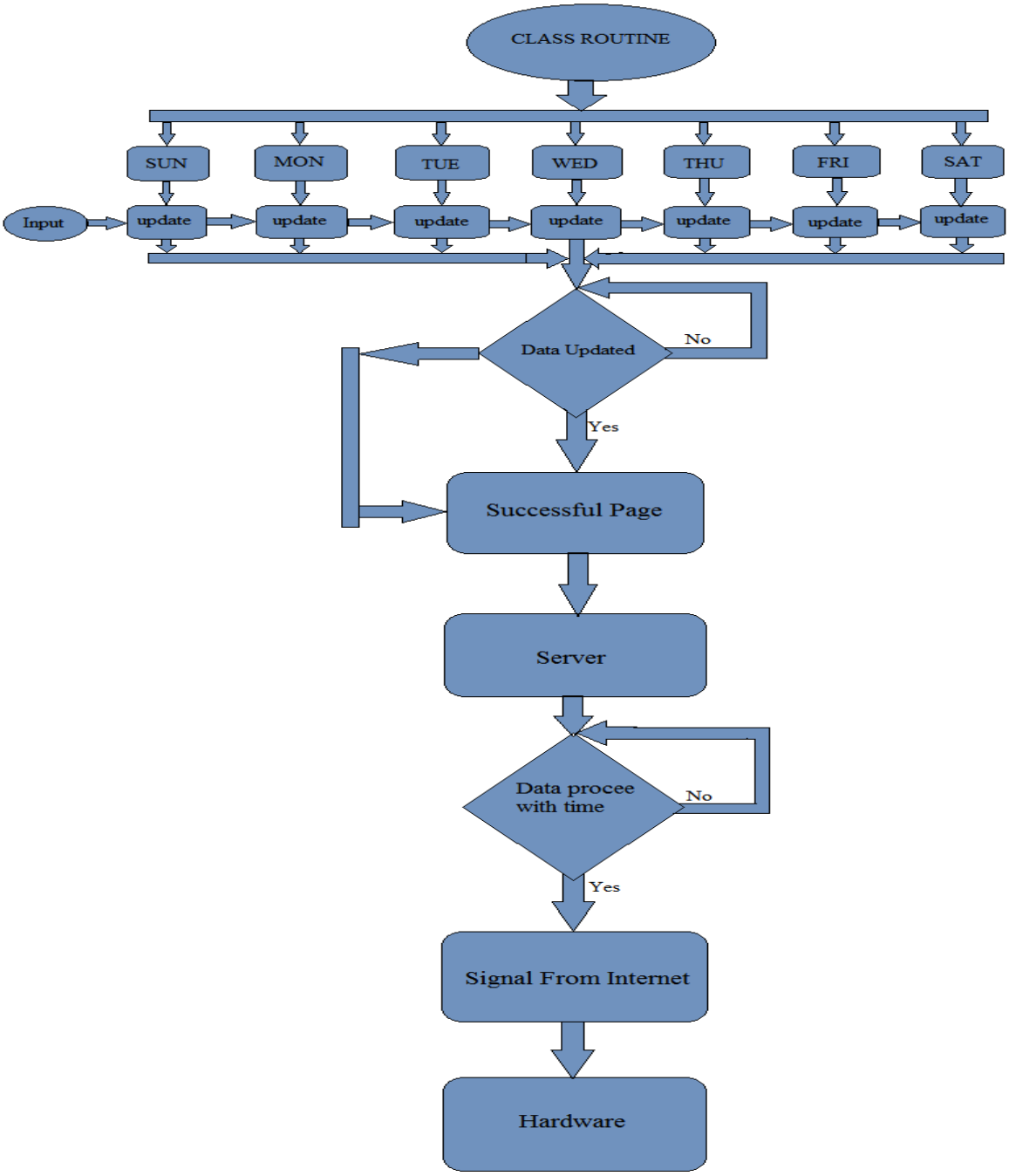

Figure -2.8: Block diagram of real time server design

2.8 System Mechanism

Here, the working procedure of our system is quite simple. The whole system of our project contains a class schedule. Initially the class routine contains seven days along with several data which has been explained before. By interring the input we can update those data. After having the input, system updated data will store and views a successful page. If there is a case of failed then data will restore again. This process will continue until data is being successful. After that, all the updated data will go to the server and process with the time. All data will process according to the time that is given through the input before.

After processing all the data it will get a signal from the internet. When the signal from the internet is done then the system will send all the information to the hardware part which contains lots of circuit. On the basis of the signal from the internet our system will start to work and the purpose will be served.

2.9 Language Portrayal

If we want to introduce the page contents as:

```
<!DOCTYPE html>
<html lang="en">
<head>
<meta charset="UTF-8">
<title>Class Routine</title>
<link rel="stylesheet" href="style.css">
</head>
<body>
<div class="container">
```

```
<table>

        <!—All rows and columns goes here..... -->

</table>
</div>
</body>
</html>
```

Here in our class routine, we initially created seven table and database in our code. We created separately seven database in our SQL server those are ‘0001’, ‘0002’, ‘0003’, ‘0004’, ‘0005’, ‘0006’, ‘0007’ each database containing separately seven table. we created the table name as ‘001’, ‘002’, ‘003’, ‘004’, ‘005’, ‘006’, ‘007’.The following code has been used quite similarly for the database and table.

First,<!Doctype html> tag, which is contain the browser as the page is written by HTML5.Similarly, <html> is another tag and <head> is the title of the tag which is different link up like <link rel= “stylesheet”. Now, type= “text/css” herf= “style.css” /> here cssstylesheet is link up. Through this link, we can style this current page from any other page from the web.

We need to end the every tag through the opposite tag like, <head>…something…</head>. Whatever work we need to do we will do the rest of the work in “body tag”.

To start the PHP we need to start with this tag <? For end we need to use the tag ?>.
The line of mysql_connect (“localhost”, “root” “”) or die (“Could not Connect”); is line that we connected with it to mysql, whereas there is been three parameter. The “localhost” is the host name of the parameter and “root” is the username. If there is no need to use the password then we can simply use parameter like “”

In the line of,mysql_select_db (“03”) or die (“Could not Select Database.”); we are selecting the database. In the case failed there will be massage that supposed to show “Could not Select Database.

$, the sign of “$” indicate the PHP variable sign. Through this sign we declare a variable like $id_00002=$_POST [‘id_00002’];

Here $id_00002 is a variable and POST is the method, we can easily insert a data, delete a data and update a data through this method and there won’t be any visual in the URL link. If we used the method call GET method then there will be visual on URL link. We basically don’t use the GET method due to have above limitation. GET method send maximum 8mb data.

In this line of… $000111_00002= “UPDATE ’02’ SET id_00002= ‘$id_00002’,… we update the table of ..‘02’.. and we have sated the this to, id_00002= ‘$id_00002……this process is work like for updating the main page we need to do click the button so as the has been updated in according to purposes. For examine the data, like if we want to change the Saturday in the name of project and we made a query and it has been changed.

>>> print “<P align=center style= ‘front-
Size: 1.5em;color:#BF8FF’>Your data are updated successfully.< /p>”<<<
There is style which is called the inline style. In this style, we can style our won format according to our wish in that line take.

After that we ended the tag using the sign ?>. this means that we ended our php tag. Similarly we ended the body tag. Accordingly, we ended the html tag.

2.9.1 Code

```
<!Doctype html>
<html>
<head>
```

```
<title>Update</title>
<link rel="stylesheet" type="text/css" href="style.css">
</head>
<body class="body">
<div class="mainContent">
<?php
mysql_connect("localhost","root","") or die("Could not Connect");
mysql_select_db("03") or die("Could not Select Database.");
$id_00002=$_POST['id_00002'];
$0000001_00002=$_POST['0000001_00002'];
$0000002_00002=$_POST['0000002_00002'];
$000$000111_00002=$_POST[0000003_00002'];
$0000003_00002=$_POST['0000003_00002'];
$0000005_00002=$_POST['0000005_00002'];
$0000007_00002=$_POST['0000007_00002'];
$0000009_00002=$_POST['0000009_00002'];
$0000004_00002=$_POST['0000004_00002'];
$0000006_00002=$_POST['0000006_00002'];
$0000008_00002=$_POST['0000008_00002'];
$00000011_00002=$_POST['00000011_00002'];
$00000012_00002=$_POST['00000012_00002'];
$00000016_00002=$_POST['00000016_00002'];
$00000015_00002=$_POST['00000015_00002'];
$00000014_00002=$_POST['00000014_00002'];
$000000120_00002=$_POST['000000120_00002'];
$000000121_00002=$_POST['000000121_00002'];
$000111_00002="UPDATE `02` SET
id_00002='$id_00002',
0000001_00002='$0000001_00002',
0000002_00002='$0000002_00002',
000$000111_00002='$000$000111_00002',
```

```
0000003_00002='$0000003_00002',
0000005_00002='$0000005_00002',
0000007_00002='$0000007_00002',
0000009_00002='$0000009_00002',
0000004_00002='$0000004_00002',
0000006_00002='$0000006_00002',
0000008_00002='$0000008_00002',
00000011_00002='$00000011_00002',
00000012_00002='$00000012_00002',
00000016_00002='$00000016_00002',
00000015_00002='$00000015_00002',
00000014_00002='$00000014_00002',
000000120_00002='$000000120_00002',
000000121_00002='$000000121_00002'
";
if(mysql_query($000111_00002))
{
print "<p align=center style='font-size:1.5em;
color:#BF8DFF'>Your Datas are updated successfully.</p>";
}
else
{
print "<p align=center style='font-size:1.5em;
color:#BF8DFF'>Your Datas are not updated.</p>";
}
?>
</div>
</body>s
</html>
```

Chapter- 3

Components Used

3.1 ATmega32A Microcontroller

When the design needs to serve specific purposes, then user needs to have a microcontroller. For this web based work we must need a microcontroller to control our whole system. In this regard, Atmega32A microcontroller is highly selected for several reasons. Now-a-days it has much advancement in electronics field. Atmega32A microcontroller is developed by Atmel Corporation. Still now, this 8 bit family is dominating 16, 32 and 64 bit digital devices. In this mega family many developments has been upgraded. This particular device is intentionally selected for its simplicity in use. Besides; it is easy to understand operation and has high popularity. Moreover, compared to other products of this series particularly this device is of low cost. Its user friendly features and tremendous applications forced to select this particular device dealing with this project. ATmega32A has 40 pins in total including 32 I/O pins. It needs least power in range of 2.7-5.5 V to start operation. Besides, advanced RISC Architecture makes the device 10 times faster than the conventional CISC Architecture devices. And, data retention for long years makes the device more acceptable. Moreover, on chip debugging can be possible through JTAG. The core combines 32 general purpose registers with the rich instruction set. These registers are directly connected with ALU (Arithmetic Logic Unit) which allows single instruction executed in 2 independent registers with one clock cycle [12]. For providing convenience Atmega32Ahas an Internal Crystal (RC) Oscillator embedded in it. Generally, users do not need to connect a Crystal Oscillator to generate clock pulse**.** Additionally, external clock can be generated for the purpose of the work. Flash memory allows the program to be reprogrammed. Furthermore, in standby mode keeping clock running only, it allows low power consumption. On the other hand, in extended standby mode oscillator and asynchronous counter continues to run. The development tool includes C compiler. For writing program AVR STUDIO can be used.

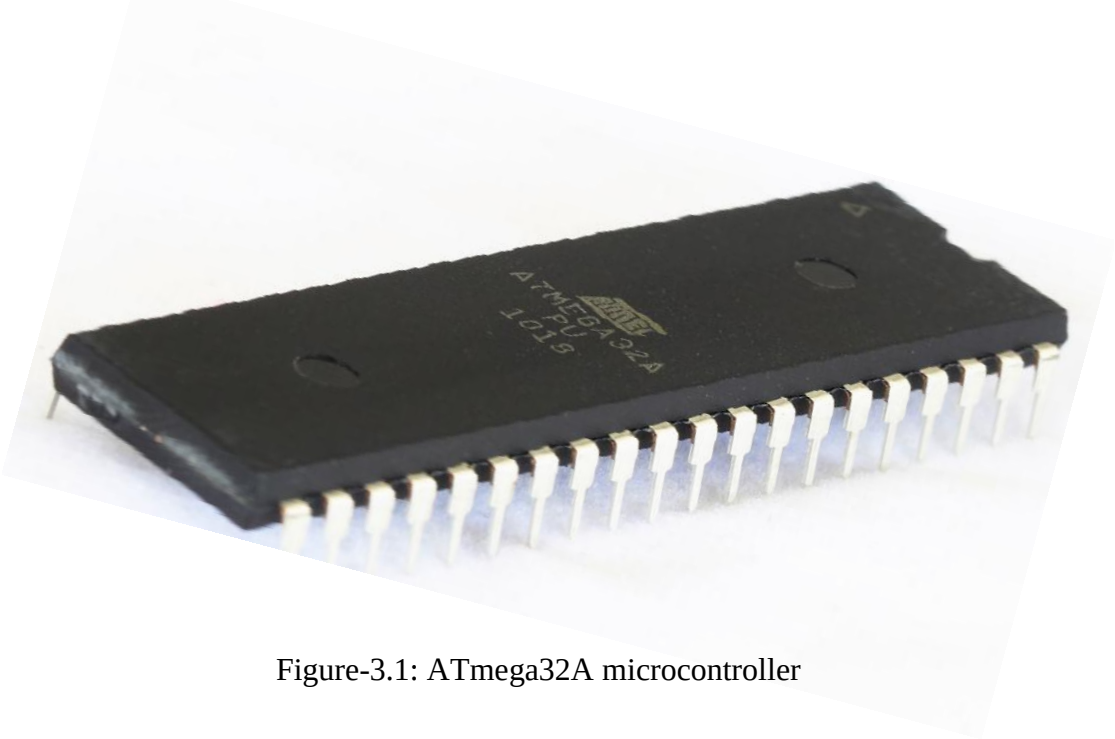

Figure-3.1: ATmega32A microcontroller

3.1.1 Pin Descriptions [12]

- Port A (PA 0-PA7): It includes 8 pins. the port serves as either 8 bit bidirectional I/O port or ADC (Analog to Digital Converter)
- Port B (PB 0-PB7): 8 pins work as bidirectional I/O port with internal pull-up registers Port B pins are tri stated when reset conditions become active
- Port C (PC 0-PC7): Bidirectional I/O port includes 8 pins connected with internal pull up resistors. If the JTAG interface is enabled, the pull-up resistors on PC5, PC3 and PC2 are activated even if reset occurs
- Port D (PD 0-PD7): 8 pins bidirectional I/O port are connected internally with pull up resistors
- VCC: Digital voltage supply is applied in this pin
- GND: It indicates ground
- RESET: It is a reset input pin. Even if the clock does not keep running, this pin creates low level pulse length
- XTAL 1: input to the inverting oscillator amplifier and input to the internal clock operating circuit
- XTAL 2: output from the inverting oscillator amplifier
- AVCC: supply voltage for Port A and ADC
- AREF: It is a reference pin for ADC

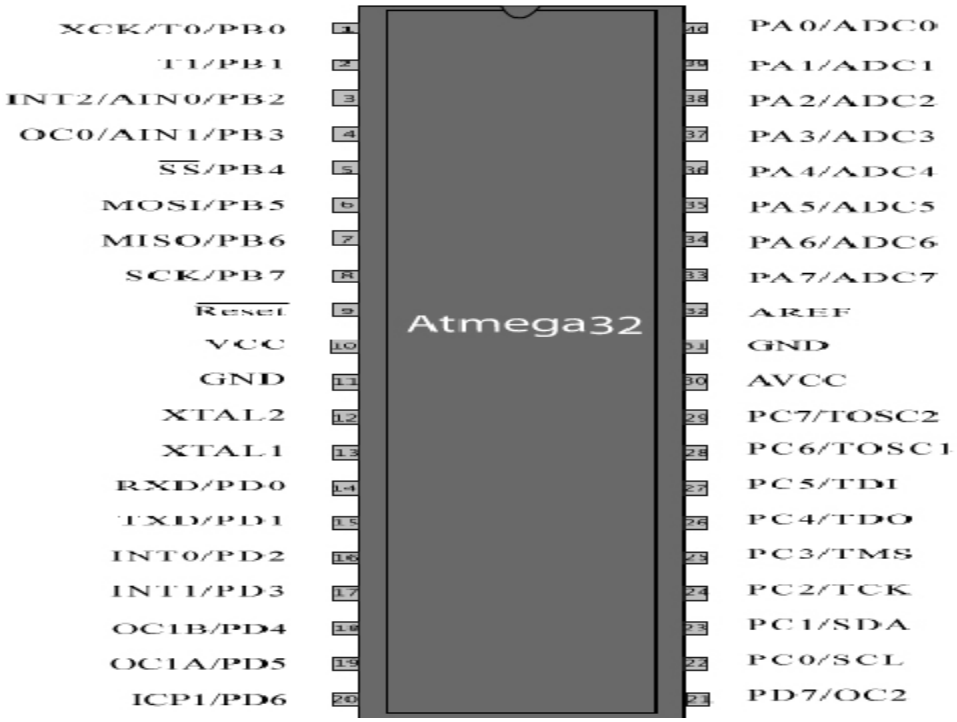

Figure-3.2: Pin diagram of ATmega32A microcontroller

3.1.2 Overview of Features [12]

- High performance, low power device
- Altogether 40 pins, including 32 digital I/O pins which can be programmed,2 pins for digital power supply,2 pins for ground,2 pins for oscillator,1 pin for reset and another pin for supplying reference voltage to internal ADC
- Advanced RISC Architecture
- 3 external interrupt included
- 3 data transfer modules available. Modules are Two Wire Interface, USART, and Serial Peripheral Interface.
- Offers 3 inbuilt timer/counters, two 8 bit timers and one 16 bit timer
- Analog comparator available on chip

- 32Kbytes Self-programmable Flash program memory, 1024 Bytes EEPROM, 2Kbytes Internal SRAM
- For Flash 10,000 Write/Erase Cycles and for EEPROM 100,000 Write/Erase Cycles
- Frequency range is from 1-16 MHz
- External Quartz Crystal, Ceramic crystal or an R-C network frequency can be obtained.
- Dedicated JTAG is for chip debugging
- Can be programmed either by In-System Programming via Serial peripheral interface or by Parallel programming
- 4 PWM channels
- Operating voltage 2.7-5.5 v
- In active mode absorbs 0.6 mA and in idle mode 0.2 mA
- Special feature include six idle mode: ADC noise reduction, power save, power down, standby and extended standby

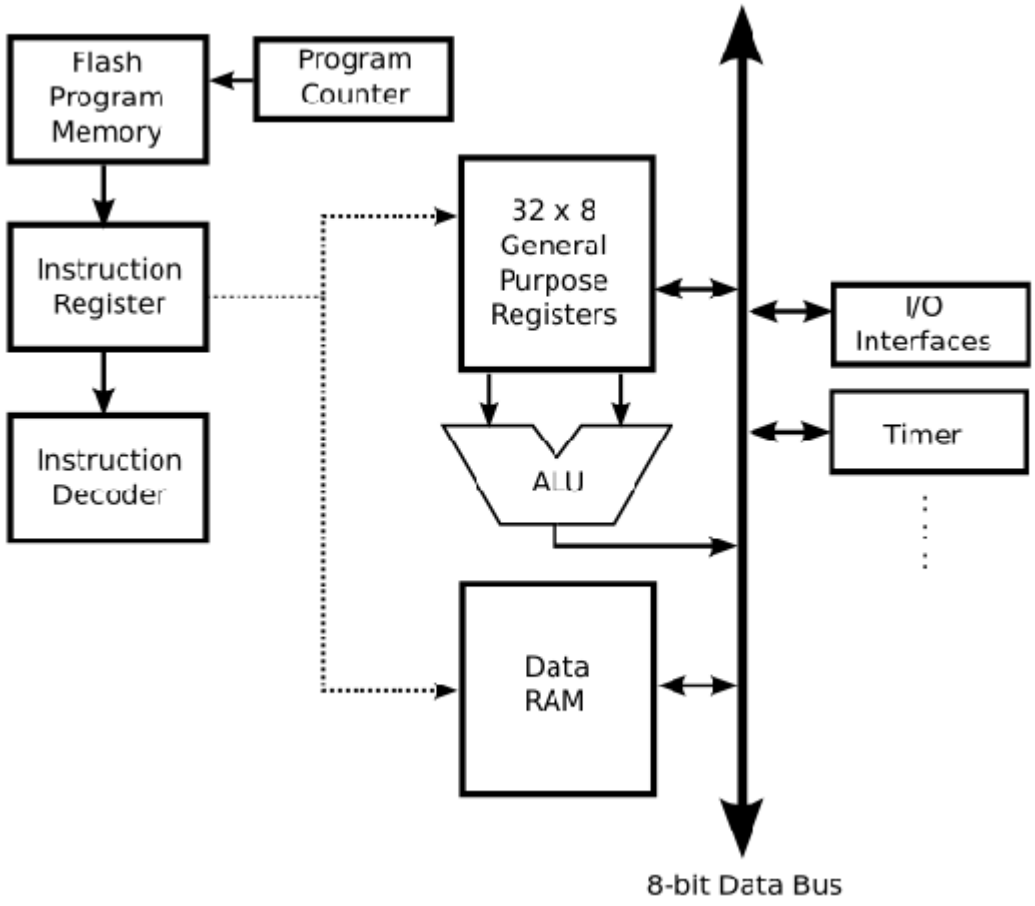

Figure-3.3: Architecture of ATmega32A microcontroller

For burning microcontroller codes Atmega32a allows 3 types of programming. One is Parallel Programming, another one is ISP Programming or serial Programming and last one is Programming via JTAG. For serial programming at ATmega32 pins are used for SPI communication. High signal (+5v) in the reset pin of microcontroller brings the microcontroller into operational state. And low signal (ground) drives it into programming mode. Internal pull up resistors are connected at the reset pin and in case of nothing is connected at this pin, then the program is executed. Designers sometimes provide a resistance capacitance reset circuit. In usual case it is not provided [13].

3.1.3 Microcontroller in Project

For facilitating digital input/output ATmega32A have 4 ports. In each port 3 registers are available. One is DDR (Data direction register), another one is port and final one is pin. In our project Port A and Port B is used for incoming and sending signals. For incoming signals DDR A, Port A and Pin 1, Pin 2 used. On the other hand, for sending signals to the desired circuitry DDR B, Port B and Pin1 is used [14].

3.2 Ethernet shield

The Ethernet Shield connects Arduino Uno to the internet. Here, shield is based on the Wiznet W5100 Ethernet chip .a network (IP) stack capable of both TCP and UDP is provided by the Wiznet W5100. It can provide support to maximum 4 simultaneous socket connections. A standard RJ 45 connector is needed to make Ethernet enabled. Moreover, an onboard micro-SD card slot is there. This card is used to store files for serving over the network. Arduino Uno (using the Ethernet library) allow SD card. The onboard micro SD card reader becomes accessible through the SD Library. When this library is used, SS is on Pin 4. The shield has a reset controller to ensure whether the W5100 Ethernet module is properly reset on power-up. Power is extracted from the twisted pair category Ethernet cable. Arduino Uno communicates with the W5100 and SD card using the SPI bus. For this communication digital pins 10, 11, 12, and 13 are used on the Uno board. Regarding this, pin 10 is used to select the W5100 and pin 4

Figure-3.4: Ethernet shield

for the SD card. Either W5100 or micro-SD card can be activated at a time. The reset button on the shield resets both the W5100 module and the Arduino board. The shield has on board several LEDs. Those are PWR, LINK, FULLD, 100M, RX, TX, COLL. PWR indicates both board and shield are powered. Then, LINK indicates presence of a network link and flashes when the shield

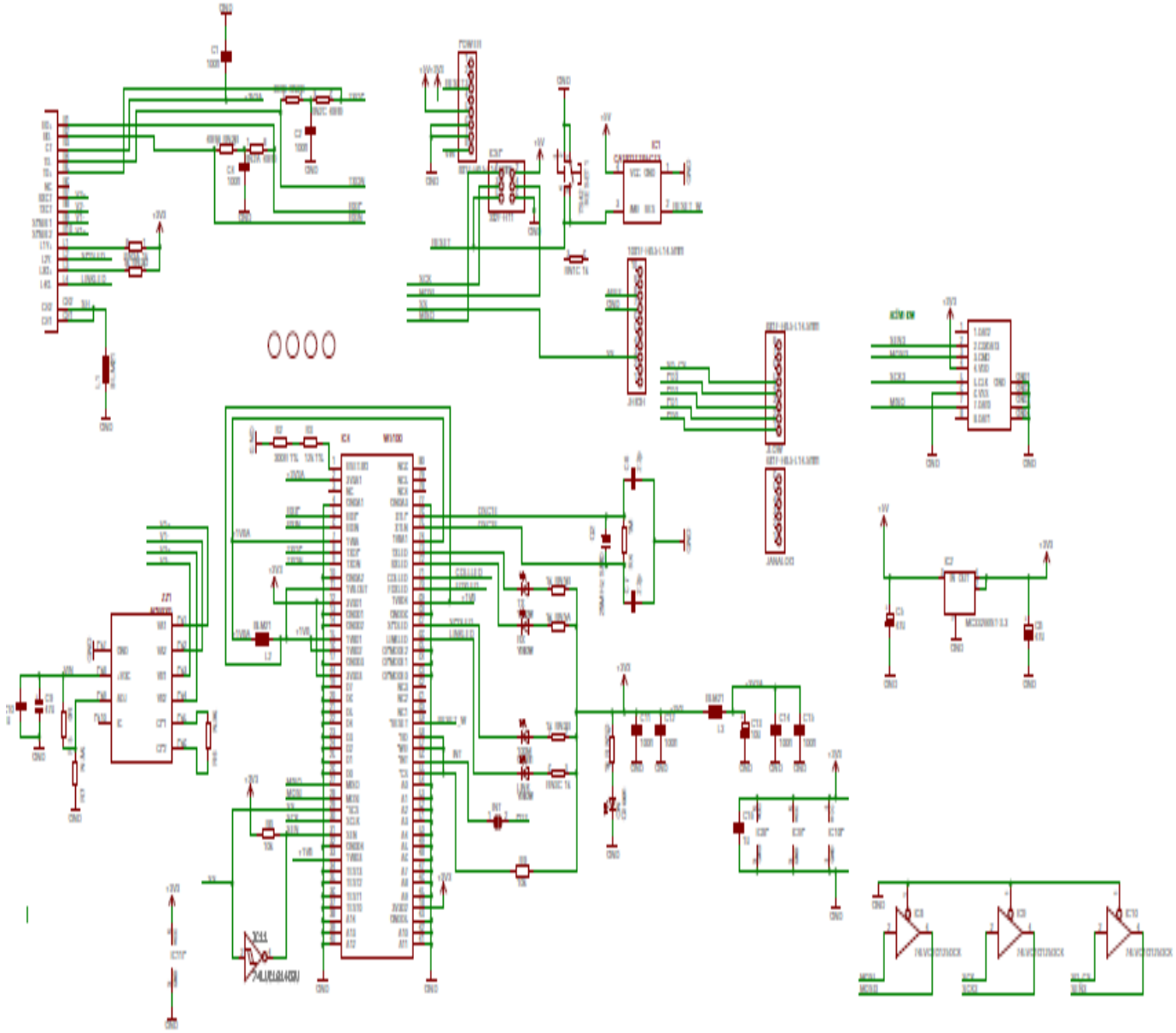

Figure-3.5: Schematic of Arduino Ethernet Shield [15]

transmits or receives data. FULLD indicates network connection in full duplex. Another indicator 100m specifies the presence of a 100 Mb/s network connection (as opposed to 10 Mb/s). Besides, RX indicates receiving data while flashes. TX indicates flashes when shield transmits data. Lastly, COLL detects network collisions when it flashes. [16].

3.2.1 Overview of W5100

W5100 Ethernet module supports half duplex and full duplex. The chip has internal 16 Kbytes memory for TX/RX buffers. Besides, it supports serial peripheral interface. The chip is highly recommended to use in network sensors, embedded system design, network printers and etc. [17].

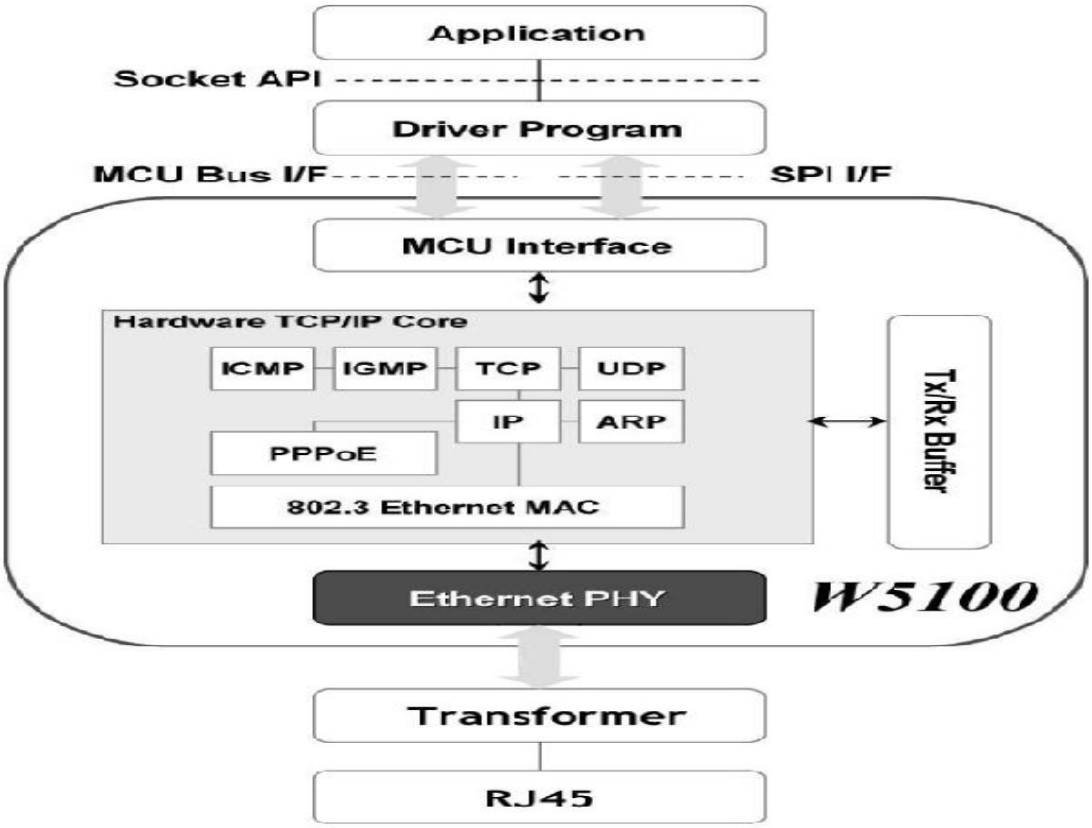

Figure-3.6: Block diagram of W5100 [3]

In our work controlling appliances from a web based database through internet network is essential. For this, it is required to deal with a network server. That's why, W5100 Ethernet module is recommended in our thesis project.

3.3 RJ 45

RJ45 is a type of connector for network cables. The connectors are commonly seen with Ethernet cables. RJ45 connectors have 8 pins. Standard RJ45 pin outs define the arrangement of the individual wires needed when reaching connectors to a cable. RJ45 also known as registered jack 45.it has shock and vibration resistant. Thermally it shocks 10 times. Different colors in the cable identify different features. Each has its own identity [18].

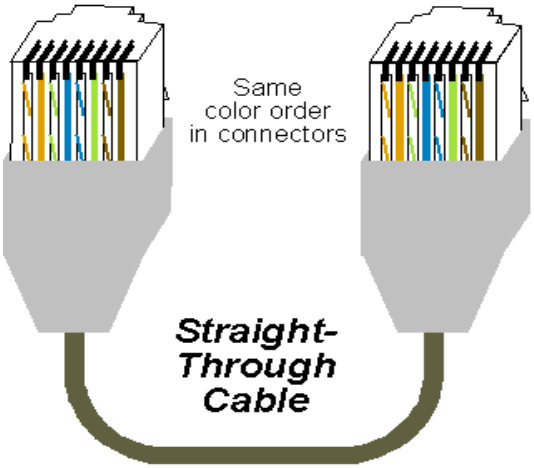

Figure-3.7: RJ 45 cable

In our thesis project RJ 45 is used to make connection between network router and Ethernet shield. The cable works as a network provider. Our cable is a straight cable which has 8 significant colors with different properties.

1	2	3	4	5	6	7	8
White Green	Green	White Orange	Blue	White Blue	Orange	White Brown	Brown
Power Return GND	+5v DC Regulated +5v	Power Return GND	1-Wire Data DQ	1-Wire Return GND	Not Connected	+12v to +24v Unregulated	Power Return GND

Figure-3.8: significance of colors in cable

3.4 Relay

Relay is known as an electrically controlled device which is used to incorporate an electronic circuit to an electrical circuit. Electronic circuits run at a low voltage. On the other hand, electrical circuits usually work at very high voltage. For bridging connection between electrical circuitry and electronic circuitry relays are incorporated.

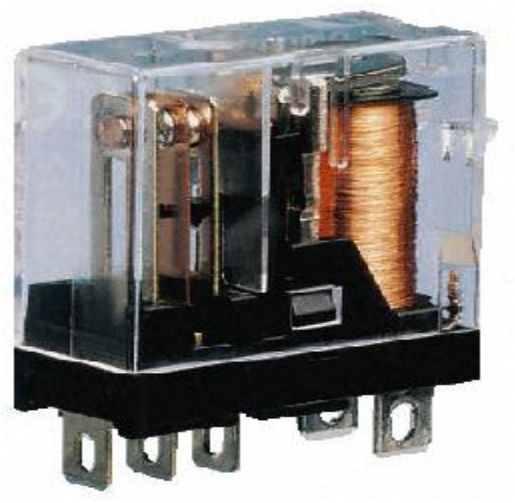

Figure-3.9: Relay

3.4.1 Types of Relay [19]

Various types of relays are available such as 3 pin, 4 pin, 5 pin, 6 pin. Among these some are of single switches or some are of dual switches. These switches are configured as SPST (Single

Pole Single Throw), SPDT (Single Pole Double Throw), DPST (Double Pole Single Throw) and DPDT (Double Pole Double Throw) etc.

SPST: This type has four terminals. In this type 2 terminals can be connected or disconnected. The other 2 terminals are needed for the coil.

SPDT: This type of a relay has 5 terminals. Out of these 2 are coil terminals. A common terminal is included which connects to either of two others.

DPST: This relay has total 6 terminals. These terminals are divided into two pairs. They act as two SPST's which are actuated by a single coil. Among the 6 terminals, 2 of them are coil terminals.

DPDT**:** It has mainly 8 relay terminals. Out of these 2 rows are designed to be change over terminals. These are designed to act as two SPDT relays which are actuated by a single coil.

3.4.2 Working Procedure

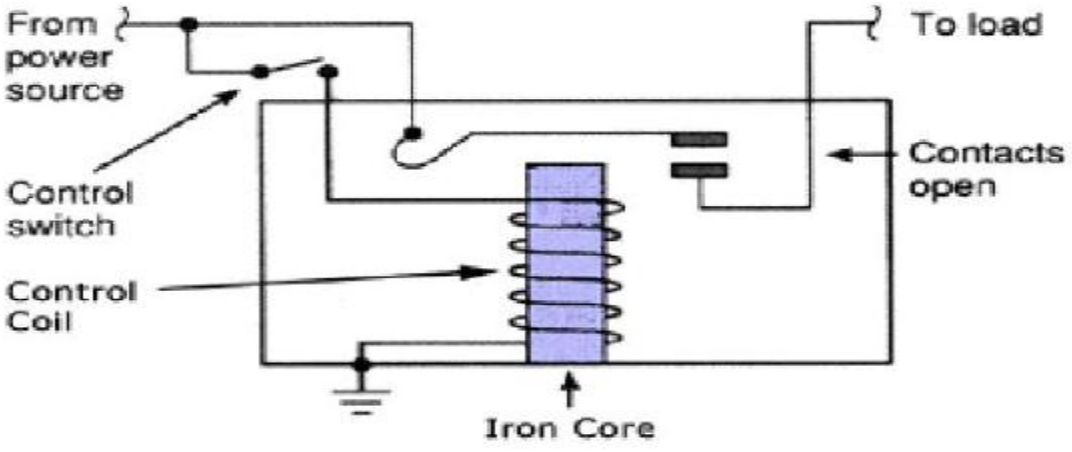

Figure-3.10: Working procedure of relay

Basically, a relay switch has two parts-input and output. The input part has a coil which produces magnetic field when a very low voltage from the electronic circuit is applied to relay. This low voltage range can be varied like 6v, 9v, 12v etc. and this low voltage is commonly known as

operating voltage. When current passes through the coil it generates a magnetic field that activates the armature. Besides, movable contacts either make or break a connection with a fixed contact. This arrangement is totally dependent upon construction. On the other hand, the output part includes three contactors such as normally open (NO), normally closed (NC) and common (COM).When there is no input, the common is connected with normally closed (NC). After applying operated voltage the relay coil becomes energized. For this, COM changes its position and is connected with normally open (NO) [20].

For example, 5 pin relay has a single control circuit but for the switch it has two separate current paths. One path is that when the relay becomes de-energized means there is no current flowing into control coil. Another path is that when the relay becomes energized means there is current flowing into control coil. In this figure when the device is de-energized, there exists continuity between pins 4 and 5. On the other hand, when the relay is energized means on and there have continuity between pins 3 and 5.

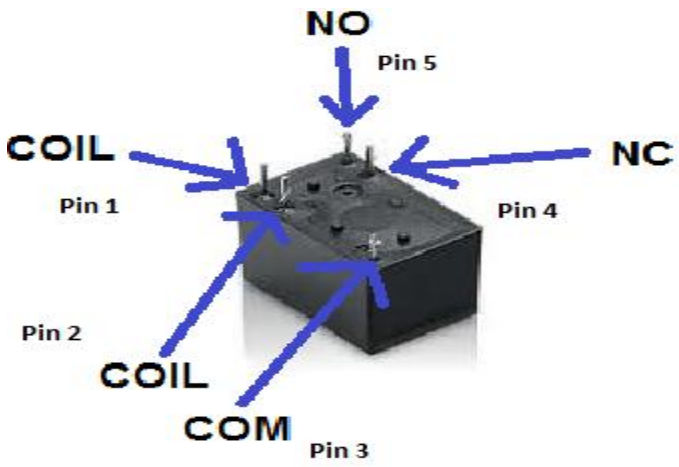

Figure-3.11: 5 pin relay

3.4.3 Relay applications [19]

- Relays are used highly to realize logic functions. They provide time delay functions. They are used to time the delay open and delay close of contacts.
- Relays control high voltage circuits with the help of low voltage signals. Similarly, to control high current circuits with the help of low current signals relays are also used.

3.4.4 Relay in our system

In our circuit relay it is required to operate a high voltage appliance like 220 V light. A relay has capability that can make a 5V DC battery circuit to switch a 220V AC mains circuit. That's why in our work a relay shield that tagged 5v relay is used. The shield provides some extra advantage. It provides more protection than usual relay having no shield. This arrangement makes us relief from concerned over checking relay connections.

Figure-3.12: 5V relay shield

3.5 PIR motion sensor

Passive Infrared Sensor popularly known as PIR sensor. The sensor is basically made of a pyro electric sensor. This rectangular size sensor has some basic features like it has 3 pins. One pin is VCC, another pin is for output named OUT and last pin is GND. For supplying power needs 3.3-

5V. When motion is detected, it provides 3v high digital pulse. On the other hand, when no motion is triggered digital pulse provides low state signal [21].

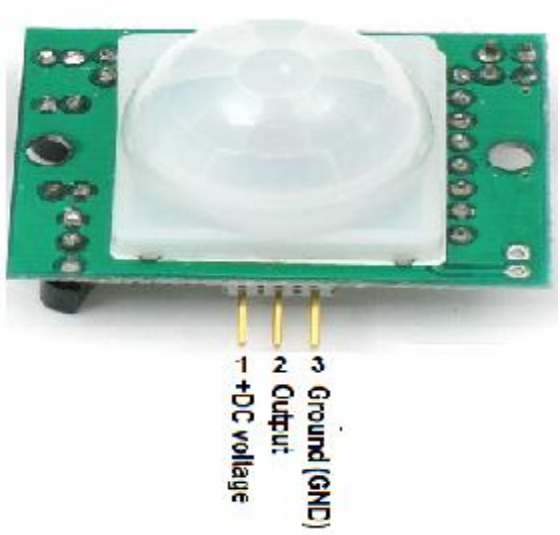

Figure-3.13: PIR motion sensor

3.5.1 Working Principle [22]

The device has capability to sense up to 20 feet. PIR motion sensor gains popularity for its low cost and low power. Additionally, wide lens range and easy interfacing make the device user friendly.

The sensor has two slots in it. These are made of a special material that is sensitive to IR. When the sensor is idle, both slots detect the same amount of IR, the ambient amount radiated from the room or walls or outdoors. When a warm body like a human passes by, it first intercepts one half of the PIR sensor, it causes a *positive differential* change between the two halves. When the

warm moving object leaves range, reverse process happens. For which a negative differential change is generated. These change pulses are detected.

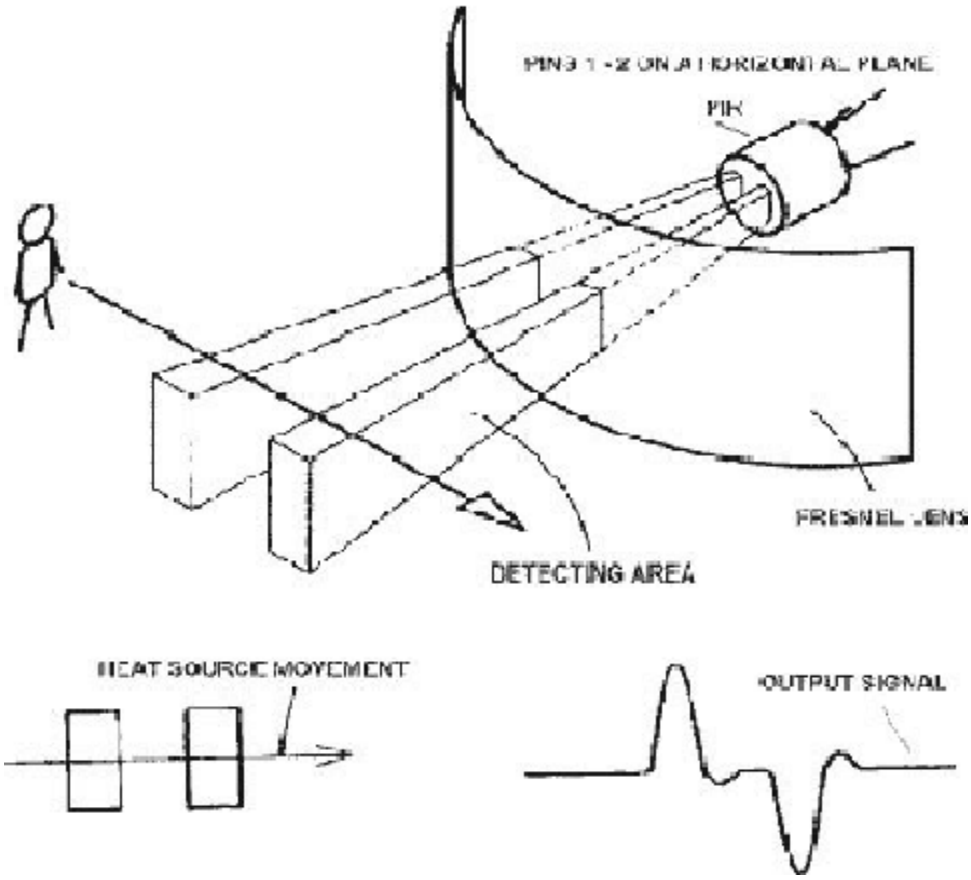

Figure-3.14: PIR motion sensor’s working system

We are using usual 3 pins PIR motion sensor.3 different colored pins are there in the device. For our PIR motion sensor the red cable is (+Ve) voltage power, black cable is dedicated for (- Ve) ground power and yellow is for signal out.

3.6 7404 [23]

The IC 7404 referred to as a not gate. It is TTL logic device. Nominally, the device works at 5V.7404 IC has 14 DIPs. Basically the device inverts the input data. In our project whatever data or signal comes to our internet module its goes as digital data to our control circuit through this inverter. It's basically passes either 0 or 1 signal to the circuit.

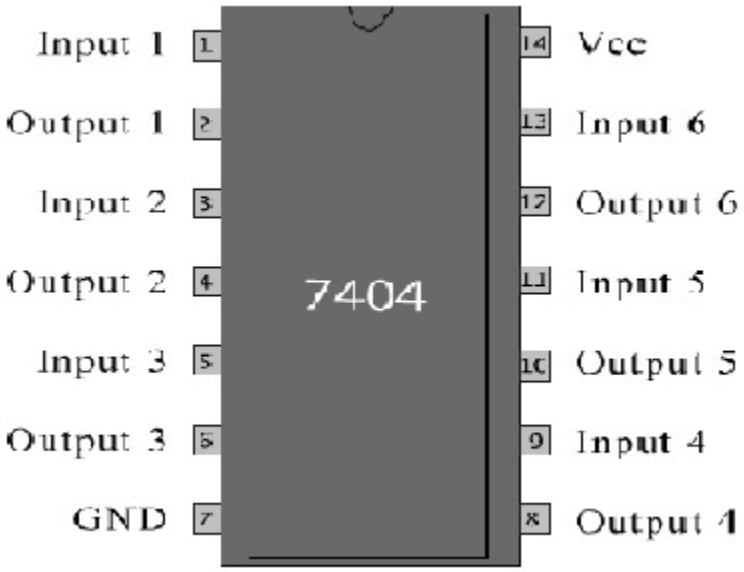

Figure-3.15: Pin diagram of 7404 IC [23]

3.7 Transistor

In this project NPN transistor is used. It is a BJT (Bipolar Junction Transistor) type. The device is used as a switch. The NPN transistor has 3 pins. Pin 1 is emitter, pin 2 is collector and pin 3 is base. A minimal current flows through base and high current absorbing current flows through collector to emitter terminal.

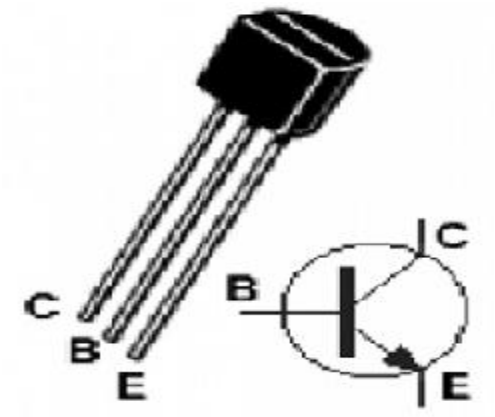

Figure-3.16: NPN transistor

In our case at base a signal comes from microcontroller unit. Emitter is grounded. The final output collector pin sends high output signal to diode. As a property of transistor it supplies high current to its output.

3.8 Diode

Diode is a two terminal containing asymmetric conductance electronic component. It is a semiconductor device. Diode consists of material which has electrical current varying ability. In our case the device works as a switch which supplies only forward current. Moreover, the device protects the circuit from reverse direction power supply.

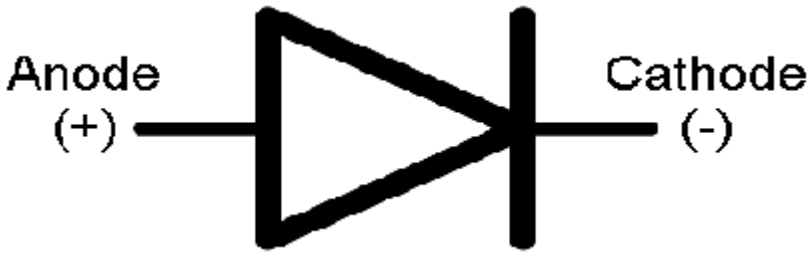

Figure-3.17: Diode

3.8.1 Characteristics [25]

For forward bias diode, V >0 and Id=Is e^ (V/nVt)-1

Vt =Volt's equivalent of temperature

q=electronic charge

k=Boltzmann's constant

n=1 for Ge, 2 for Si

For reverse bias diode v< 0 and Id=Is

V=supply voltage

Id=diode current

Is=reverse saturation current

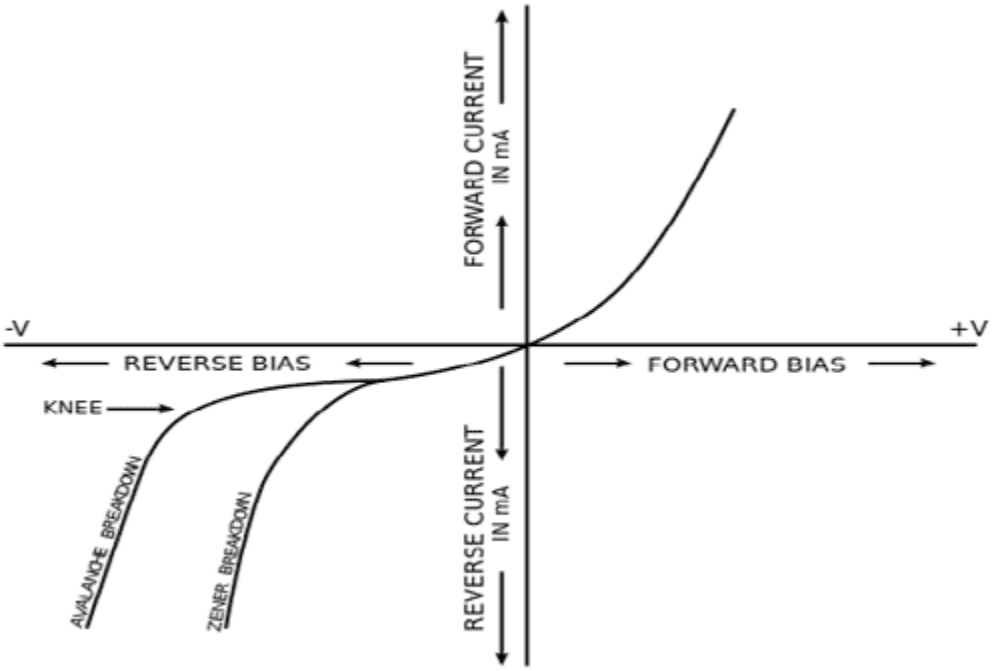

Figure-3.18: Characteristics of diode [25]

3.9 7805 Voltage Regulator

7805 voltage regulator is used widely to make power supply to electronic circuits. Commonly, electronic circuits are operated with 5v power supply. It has 3 pins. Pin 1 is connected with positive terminal of power supply, Pin 2 is connected with ground and finally pin 3 which turns output voltage 5v.In our project 5v relay is used. To make relay energized needs high current and 5v power. That's why, from external 9v battery through this LM7805 regulator 5v is supplied to relay.

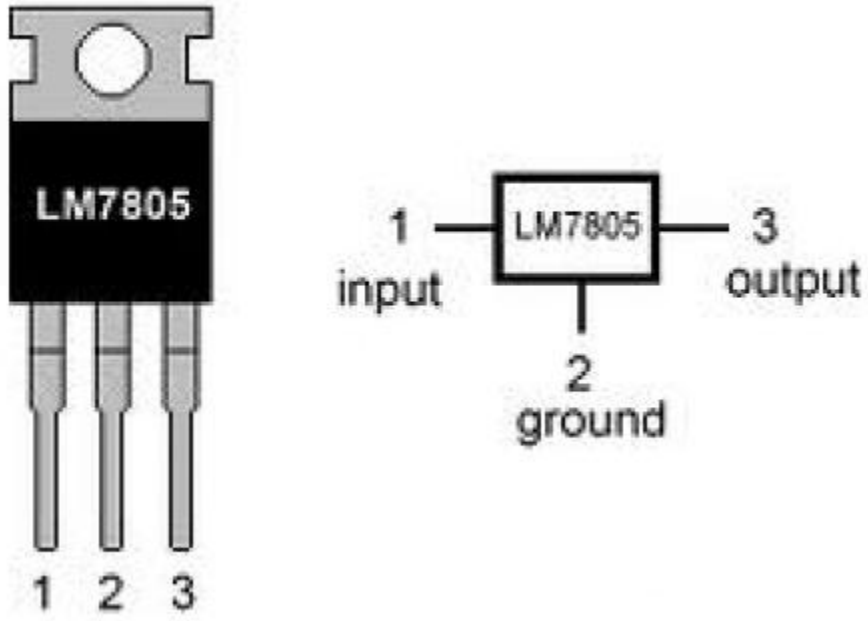

Figure-3.19: 7805 voltage regulator

Chapter -4

System Architecture

4.1 System Layout

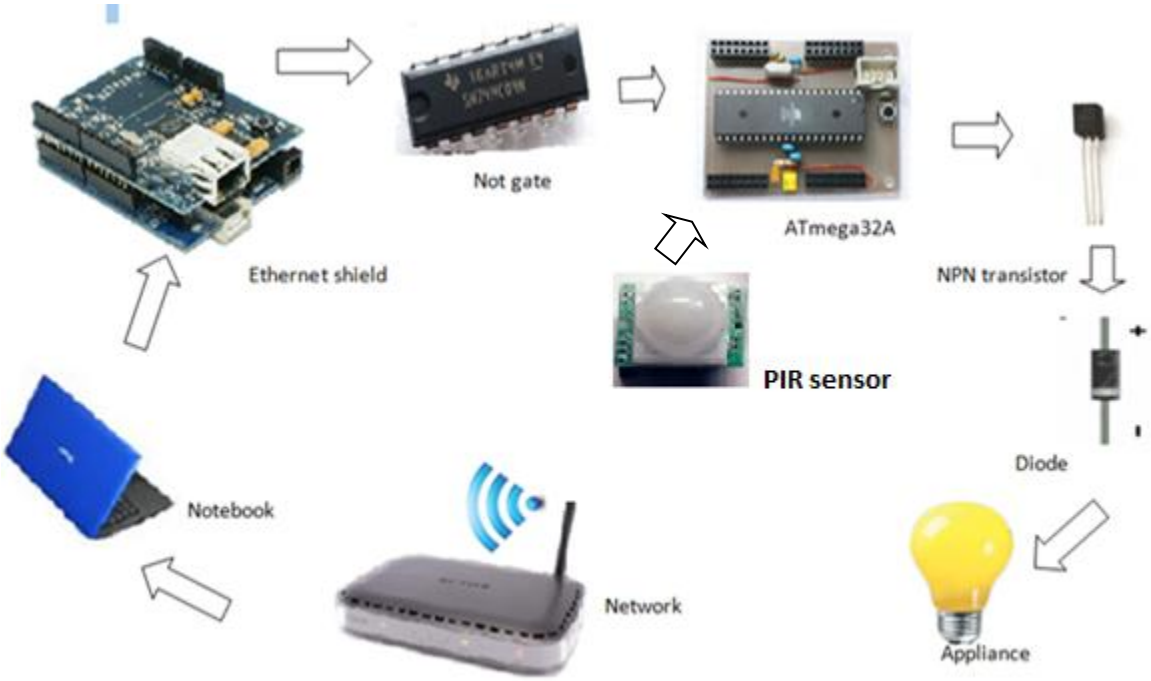

Figure-4.1: System layout

This layout reveals actual working of all components. Basically, this layout shapes the idea of overall working system. Here, using a notebook the database is accessing. Ethernet shield is working as a network provider to the circuit. Signal from the database is passing to the circuit through Ethernet shield. That signal along with motion detector signal both are processed in microcontroller. From the microcontroller the output signal goes to NPN transistor. And high current energizes relay. The transistor also works as a switch. Diode is used to prevent reverse direction current flow.

4.2 Block Diagram of the System

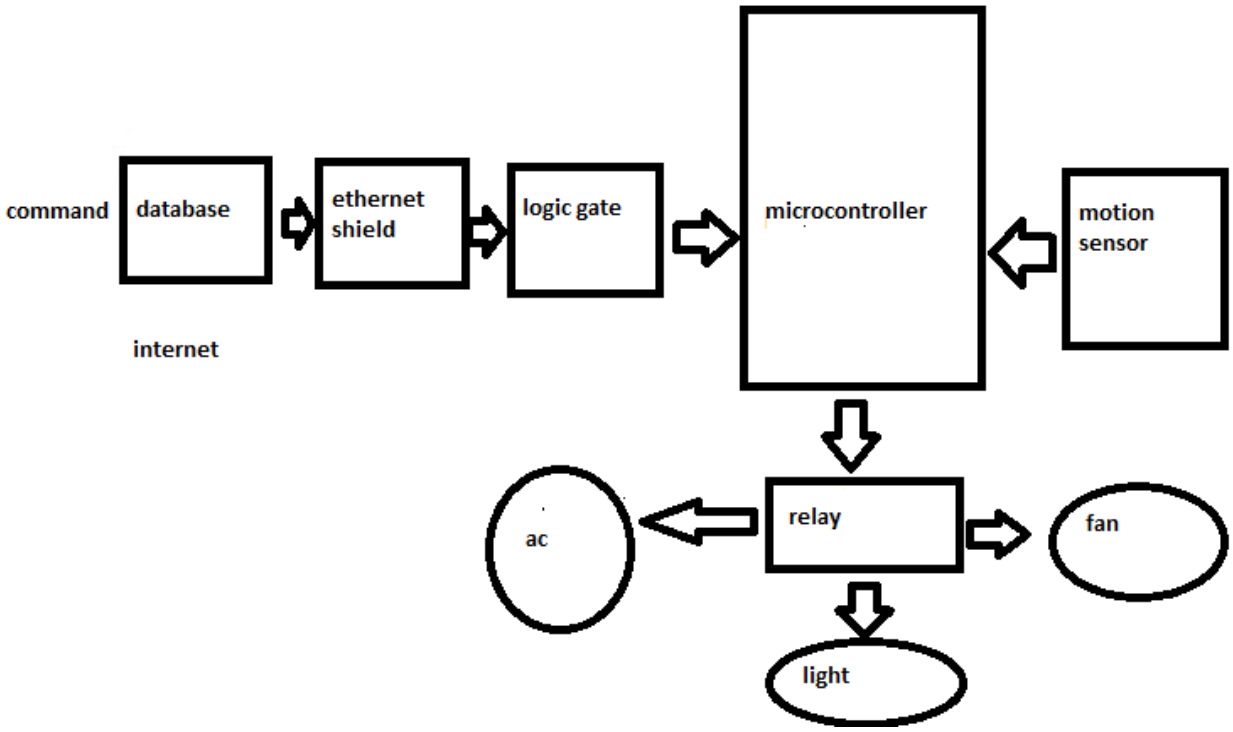

Figure- 4.2: Block diagram of overall system

Here, each component is used as a block. With arrow mark and proper block the system sequence is shown. Microcontroller is used in the system for taking multiple logics from the system and finally to send one logic to the output circuit. As appliances any general appliance like light, fan can easily be controller with this system

4.4 Schematic Design

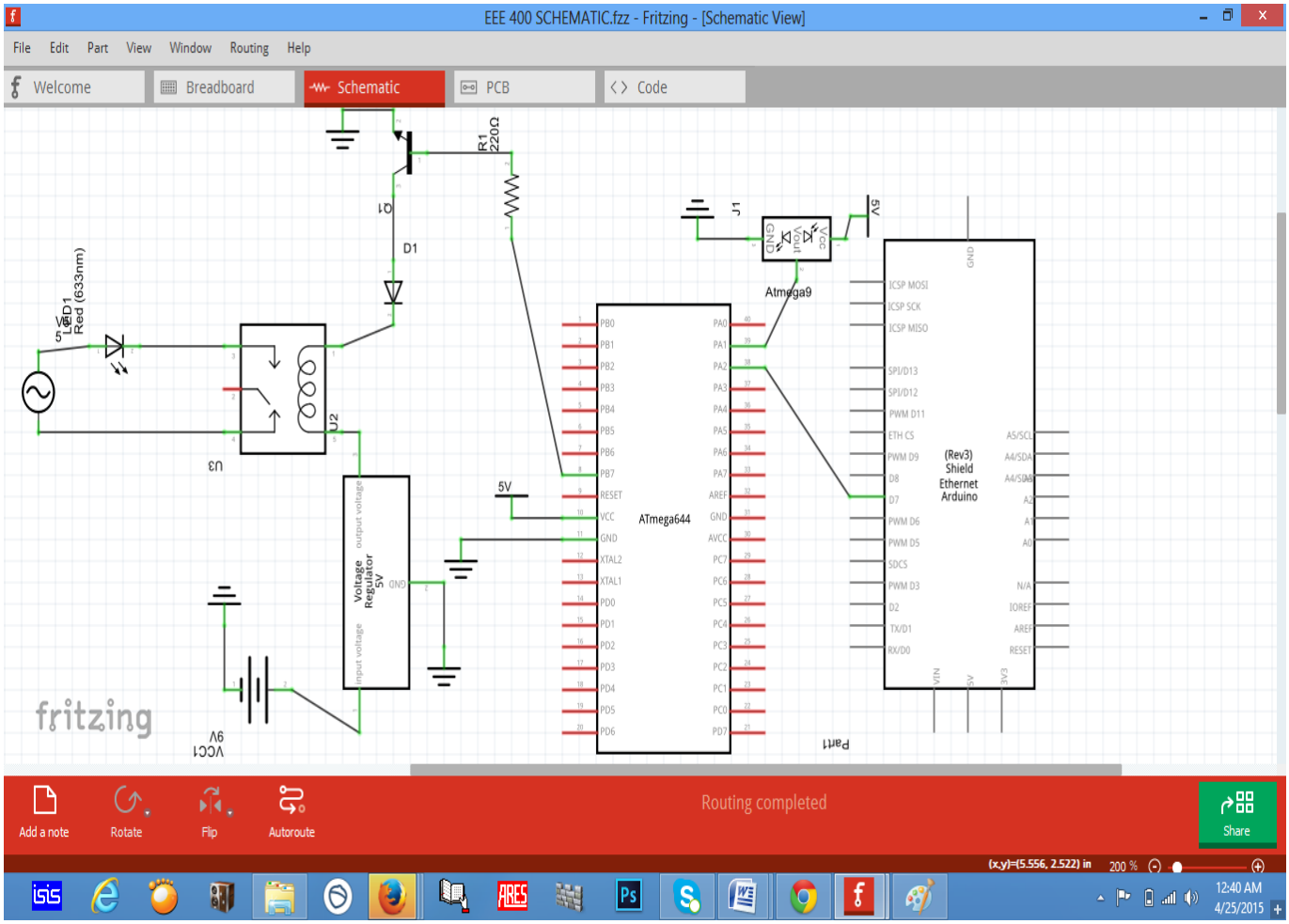

Figure-4.3: Schematic of system

For schematic design of the system Fritzing is used. It is open source software which supports designers to move from physical prototyping to actual product. The Source Code of this software is written in C in the Nokia QT Framework. Since, AC light is not available in this tool, that's why a led is used. Fritzing provides better schematic design than Proteus because of Ethernet shield and motion sensor availability.

4.5 Flow Chart

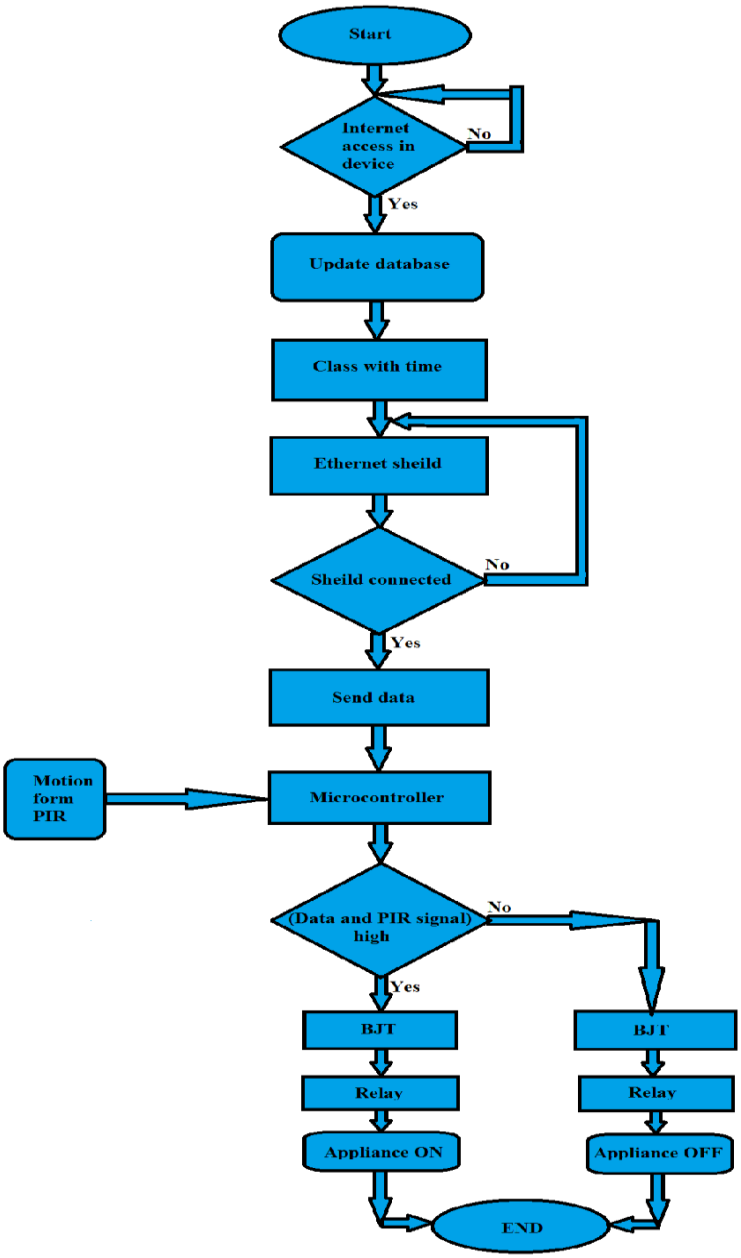

Figure-4.4: Flowchart of the system

Chapter- 5

Implementation of the System

5.1 Implementation

We selected Friday to implement the developed system. We fixed the time from 4.40 pm-4.42 pm in afternoon. During this period high signal was coming from database. And through the Ethernet shield as it serves as a network provider, that high signal destine to the circuit board. The signal from the Pin7 of the shield passes to an inverter logic gate. This signal is inverted double times to flow the original signal. Besides, from the PIR motion detector signal was coming too. When within its 20 feet range the detector was able to detect any motion then it was sending high signal. In contrary when no motion could be detected, then low signal was sending from motion detector. Both the signals from PIR motion detector and real time server finally come to ATmega32Amicrocontroller. In microcontroller code it is provided such logic that if any of the signal is in low state, the final appliance as an output will not be on. On the other hand, only when both the incoming signals to the microcontroller would be in high state the connected appliance would be on. For driving the relay power is applied from external battery. Since the relay was 5v relay that's why a 7805 voltage regulator was used to supply 5v to the relay. Besides, transistor is used to make flowing high current to the relay for energizing its coil.

During our implementation period light as appliance was glowing when the circuit got both high signals. And it was off while during the fixed time range from the surrounding the circuit was failed to get any motion signal.

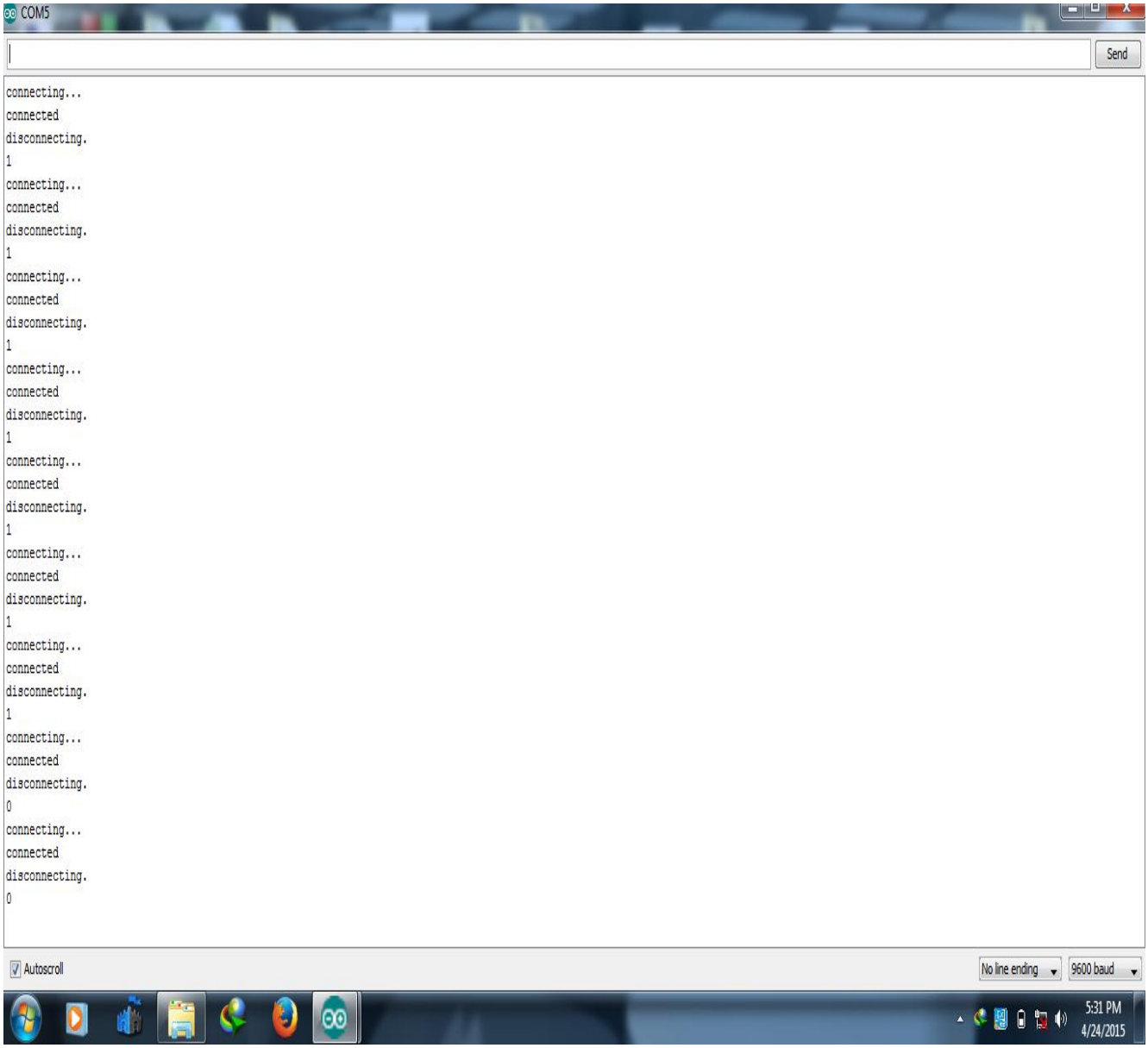

Figure-5.1: Ethernet signal

Full system set up picture

Figure– 5.2: The entire system

Chapter-6

Advantages & Limitations

6.1 Advantages

The advantages of this project are as follows: Firstly, it has the capacity to be in command of the user-desired electrical device through real time server. The live-in settings can be suggested when the class room is left unattended during break time, holiday, and in-control of class room settings through real time server.

The effective advantages of this Home Automation project can be discussed under the following headings;

- Reduced installation cost

First and foremost installation cost is least to establish the system. Just need an internet network and little circuitry for developing the overall system.

- Easy deployment

For developing the system users need to install the little circuit board containing a low cost microcontroller, motion sensor, BJT and relay with the final appliances.

- Accessibility

For either commanding or updating database, it is possible to make access from any sort of device like mobile phone, notebook, tablet pc, desktop. Moreover, getting access from far away make the system more fruitful to users.

- Handiness

A real time server based home automation project vanish handiness. Apart from the use of class room based electronics devices; anyone can ‘switch off’ any domestic electronics device like air conditioner, lights, fan etc. which are still switched on when these are not in use.

- Energy savings

By means of the real time server based sophisticated home automation it is possible to cut down electricity bill; since it saves energy. This is fairly possible because as when anyone doesn’t require keeping the electronics devices switched on or off; he can easily have control over the devices, and this effectively saves energy. That ensures the optimal use of energy.

- Saves time

It is obvious that today’s world is busier than in days what went before. People are constantly running from place to place; work to accomplish everything on the never-ending “to-do” list. Just because of the up-to-the-minute character of a house mechanization system, they never have to be concerned about running house to open the door for their kids after school or making a fast discontinue at home in order adjusting household items.

- Makes home and business safer

The phrase “It’s better to be safe than sorry” can be taken relatively literally at this time. Shielding yourself, your house and your corporation is a matter of common sense. Of course, it is always good to start at the basis: fit excellent physical security, like burglary-proof windows and locks. But also electronic security is, in various cases, a necessity; even a dread room is among the possibilities.

In conclusion, investing in a class room automation system will benefit in several ways. It is cost efficient, ensures optimal use of time and energy. Most importantly, it will get better life feature and keeping us away from any electrical vulnerability.

6.2 Limitations

Several limitations are observed throughout our project. Our project is totally internet based. We are controlling our system through internet access. As we are controlling this through internet so we need confirm higher speed of internet. If the speed become low system delay will occurs. To avoid the delay we need make sure of higher speed of internet.

- This project relies totally on power. If power failure happens then internet connection will be halted. For this, database access will be stopped.

- Though it requires less circuitry but cost is not in minimal range. For getting facility users need to expense for this.

- If strong network does not exist, then Ethernet shield will not be working as a network provider to the circuit. Finally, system will be halted.

- This real time server base system is limited to one person that means at a time only one user can operate the home automation system.

- Ethernet shield heats up for long hour's operations. To overcome this external DC jack can be used with the shield.

- It is not undisclosed that installing a home automation system can be to a certain extent expensive. But, it all depends on the apparatus you wish to have installed. Remember, the more sophisticated system you wish to have in your home the more expensive it will be.

- If there is any break due to rupturing of cables or the fibers the total system gets crashed. This will not be the case of radio signals or the other signals. Here, there will be a difficulty of signal receiving. The wiring of the system results in crash in most of the systems.

- If the individual does not handle the equipment safely or if he/she does not make use of the exact keys to carry out the operations, human errors may occur. Human faults also direct to destructions of the device. Then there will be a massive system collides.

- Each invent has two sides. Home automation also has numerous drawbacks. Numerous People consider it has a possible to make people lazier. That ultimately might end up making massive harm in human social and professional life.

Chapter- 7

Conclusion

7.1 Summary

Today in this century home and offices are equipped with various machineries. Besides, people have various devices for surfing in web. That's why we have introduced a system that can be accessed from all sorts of devices and database can be updated from anywhere. Besides, most of our power equipment's are light, fan and air conditioner. Light is very common. So that, for experimenting our concept we used light. If this particular device works on, the other means of devices will be easily operated. The database is developed such a way that can be accessed from any sort of device that supports internet. In this regard motion sensor is brought here because of its high quality sensing. The system is very easy to install. For this, just need internet connection and for motion detection a motion sensor. Home Automation is definitely a resource which is capable of make a home setting automated. People can be in command of their electrical devices via these Home Automation devices and set up the controlling actions in the workstation. We think this device have high potential for marketing in the future.

7.2 Final Remark

Web based home automation is accessible through everywhere. This provides special benefit in the system. Moreover, the system keeps pace with modern technology. So with the revolution in technology, the system can provide higher efficiency

7.3 Future Modifications

In real time web based home automation system, it is figured out to control appliances in a certain time frame to make devices either on or off. In near future, our plan is extended to make device wise control. For this, different appliances would be in the output ports. Multiple devices would be connected in that case. In our real time database such arrangements will be available that will on or off any of the appliances within a time frame. So, appliance controlling will be more automated. Further, the work can be modified to strengthen security by detecting identity of the owner of the system. Another modification can be organized by matching several routines. That case, the system will effectively work for multiple persons sharing a room. With this, the

system can be incorporated in a whole building of any institution or residential building. This way, advantages of home automation can be more availed.

References

[1] http://compnetworking.about.com/od/homeautomationvalueproposition/a/top-reasons-to-automate-your-home.htm

[2] Application Security Scanning Today – Big Organizations, Big Challenges
http://www.manvswebapp.com/application-security-scanner-coverage

[3] Implementing Automated Software Testing - Continuously Track Progress and Adjust Accordingly

http://www.methodsandtools.com/archive/archive.php?id=94

[4] Types of Home Automation, retrieved Nov 23, 2010
http://www.homeimprovementpages.com.au/article/Types_Home_Automation

[5] Research & Market: Worldwide Smart Homes market from 2013 to 2020 (in billion U.S dollar)

[6] Projected revenue: Americas smart homes market from 2013 to 2020 (in billion U.S. dollars)

[7] Albany, NY, Jan. 16, 2015 (GLOBE NEWSWIRE) -- According to a new market report published by Transparency Market Research "***Home Automation Market - Global Industry Analysis, Size, Share, Growth, Trends and Forecast 2014 - 2020***"

[8] http://www.dutchbanglabank.com/about-us/brief-history.html

[9]www.datasoft-bd.com/index.php?...id=162:chittagong...57

[10]**PHP 5 Tutorial - W3Schools**
http:// www.w3schools.com/tutorialpoints.com

[11]http://stackoverflow.com/php.net

[12] ATmega 32A datasheet

[13] ISP Programmer for ATmega32 Microcontroller

http://www.circuitstoday.com/isp-programmer

[14] Handling the Digital Input Output in AVR Micro Controllers

http://www.circuitstoday.com/handling-the-digital-input-output-in-avr-micro-controllers

[15] www.arduino.cc/en/uploads/.../arduino-ethernet-shield-06-schematic.pdf

[16] Arduino Ethernet Shield

http://www.arduino.cc/en/Main/ArduinoEthernetShield

[17]https://www.sparkfun.com/datasheets/DevTools/Arduino/W5100_Datasheet_v1_1_6.pdf

[18]http://en.wikipedia.org/wiki/Registered_jack#RJ45

[19]Working of Relays

http://www.circuitstoday.com/working-of-relays

[20] Relay Switch
http://www.engineersgarage.com/electronic-components/relays

[21] Overview.PIR Motion Sensor

https://learn.adafruit.com/pir-passive-infrared-proximity-motion-sensor/overview

[22]https://learn.adafruit.com/pir-passive-infrared-proximity-motion-sensor/how-pirs-work

[23] 7404 datasheet

http://www.engineersgarage.com/electronic-components/74ls04-datasheet

[24]http://www.talkingelectronics.com/projects/BasicElectronics-1A/BasicElectronics-1A_Page2.html

[25] http://electrical4u.com/diode-characteristics/

[26] Hasan, M.N., & Hossain, M.A. (2014).Modern Home Automation System Based On AVR Microcontroller. *International Journal of Scientific and Engineering Research, 5*(1).

[27] Rana, M., & Singh, R. SMART HOMES FOR A BETTER LIVING USING BLUETOOTH COMMUNICATION BASED ON ATMEGA MICROCONTROLLER. *IJRET:International Journal of Research in Engineering & Technology.*

[28]Shahriar,R.,Haque,Sohan,S.M.,Naim,I.,Akbar,&Khan,M.M.(2008,July8).Remote Controlling of Home Appliances Using Mobile Telepnony.*International Journal of Smart Home,2*(3)

[29] Bingol,O., &Tasdelen,K. (2014).Web-based Smart Home Automation:PlC-ControlledImplementation.*ActaPolytechnica Hungarica,11*(3).

[30] Marriam,B., Khanam,M.,Khan,A.,&Khiyal,M.S.H.(2009).Controlling Home Appliances Remotely Through Voice Command .*International Journal of Advanced Computer Science and Appliances,Special Issue on Wireless & Mobile Networks*.

Appendix

Code of Microcontroller

```
#include <avr/io.h>                    // Standard AVR header that controls input & output pins

#include <util/delay.h>                // defining delay

int main(void){                        // execution starts

DDRA &= ~(1<<DDA1);                    // declaring port A as input

DDRA &= ~(1<<DDA2);                    // declaring port A as input

PORTA &= ~1<<PINA1;                    // defining Pin1 of PortA as input

 PORTA &= ~1<<PINA2;                   // defining Pin1 of PortA as input

DDRB |= 1<<DDB1;                       // declaring Pin1 of PortB as output

while(1){ //do forever

if (PINA & (1<<PINA1) && PINA & (1<<PINA2)){        // Pin1& Pin2 of Port A are both high

 PORTB |= 1<<PINB1;                                 //  PortB Pin1 is high

_delay_ms (500);                       //  wait for 500 ms

}
else
{
```

```
PORTB &= ~1<<PINB1;                    // Pin1 of PortB is low
}
}
}
```

Code of Ethernet Shield

```
#include <Ethernet.h>                  // library for ethernet functions

#include <SPI.h>                       //  for serial communication

byteip[] = { 192, 168, 1, 177 };       // IP address of ethernet shield

bytednss[]= {8,7,8,9 };                // IP address of URL

EthernetClient client;                 // Ethernet shield as client

char server[] = "192, 168, 2, 184";    // IP address of website

String location = "HTTP/1.0";          // version of URL

charinString[];                        // declaring variable


intstringPos = 0;                      // initializing variable


booleanstartRead = false;


void setup(){                          // indicating Pin status

Ethernet.begin();                      // Ethernet initialization

pinMode(7, OUTPUT);                    // declaring Pin7 of shield as output
```

```
}
void loop(){                                        // main program executes from here
String pageValue = connectAndRead();            // intializing function
Serial.println();                                 // declaring output
delay(5000);                                      // wait 5 seconds
}
String connectAndRead(){                        // calling the function
Serial.println("...");
if (client.connect()) {                           // whether ethernet shield is connected
Serial.println("connected");                    // shield is connected

client.println();
returnreadPage();                               // return to database

}else{

return "failed";                                // connection failure is returned
}
}
String readPage(){                              // declaring function
stringPos = 0;                                  //  intializing variable
memset(inString, 0 );
while(){                                          //loop starts
```

```
if (client.available()) {                    // whether contact with shield
char c = client.read();                      // value is stored in c
if (c=='(' ) {                               // whether value inside parentheses found


startRead = 1;                               // make the value high
}else if(startRead){
if(c = ')'){
inString[stringPos] = c;                     //when finds value stores in a array
if(c == ''){
digitalWrite(led, HIGH);                     // sends Pin7 high value
delay(5000);                                 //wait
else {
}
}
}else{
startRead = false;                           // value in database not found
client.stop();                               // sending no data
client.flush();
Serial.println("failed");                    // printing failure status
}
}
}
}
```